Dear Owner:

In terms of both design and manufacture, your ECL-230 Series Panic Hardware Device represents the highest quality standards Detex has to offer in meeting your security needs. Prior to leaving our factory, your unit was tested thoroughly to insure that it meets UL listing requirements.

However, like any mechanical device used only occasionally, your ECL-230 needs periodic cycling to insure that it functions properly when an emergency arises. So that your lock continues to give the protection and service for which it was purchased, we urge you to set up an ongoing checking/maintenance program.

The procedures outlined in this manual will assist in establishing a structured inspection/maintenance program. Assign someone to be responsible for instituting it, including coordination of semi-annual inspections with designated service personnel and the logging of inspection dates.

In the event that your checking/maintenance program uncovers a problem, inspection data recorded on the maintenance/inspection log will be taken into consideration if the unit is returned to Detex for evaluation. (Detex reserves the sole right to determine action to be taken on returned goods.)

Remember the attention you give to your ECL-230 Series Panic Hardware Device may save a life! If you need additional assistance regarding your inspection/maintenance program, contact our Product Services Department.

DETEX CORPORATION
302 Detex Drive
New Braunfels, Texas 78130
(830) 629-2900

ECL-230D AND ECL-230D-PH
PANIC HARDWARE DEVICE

Owner's Inspection and Maintenance Manual

DETEX®

RELIABILITY SERVICE QUALITY

SALES OFFICE
302 DETEX DR.
NEW BRAUNFELS, TX 78130
(830) 629-2900

IMP-230D/1B 3/19/03

OPERATIONS TEST FOR ECL-230D (WEEKLY TESTS)

This test checks lock operation and condition of battery (or battery eliminator).

1. With the door closed, rotate the I.K.C. key clockwise a full 360 degree (from the key out position) to extend the bolt into the keeper (the locked position). Remove the I.K.C. key. Next push the paddle bar. The alarm should sound and the bolt should retract to unlock the door.

2. Open the door.

3. Close the door, and arm the unit with the cylinder key. The bolt extends and the unit stops sounding.

Visual Inspection (Twice a year)

1. Inspect door and door frame. Make sure door opens easily and does not bind against the frame or threshold. Check for door sag and warping.

Also check conditions of hinges and lubricant as needed.

2. Remove lock cover. Check for dirt accumulation, battery leakage, and for smooth operation of bar, bolt and cylinder.

Should moving parts require lubrication, use either LPS #1 or WD-40 *only*. (See Lubrication Diagram on Page 5).

Important Note: When extended, the bolt must never bind against the inside of the keeper.

Should the bolt bind, reposition the keeper so that the bolt withdraws without restriction.

3. Repeat weekly Operation Test (above) several times to insure proper functioning.

ECL-230D ANNUAL MAINTENANCE TESTS

Follow each step completely and in order before proceeding to the next step.

1. Siren does not sound when the paddle bar is pushed:

A) Extend the bolt and remove key.

Push on the paddle bar - bolt retracts and siren should sound, if not

B) Remove the cover by inserting the cover key and turning it counter-clockwise approximately 6-8 complete turns.

C) Disengage the cover from the back plate and swing it out of the way.

D) Confirm the battery is good visually and the voltage is a minimum of 7 volts. If OK continue. If not replace the battery and check for broken wires and retest. If unit is still not sounding

E) Call DETEX Customer Service in USA at 1-830-629-2900

2. Key control cylinder (IKC) - Hard to turn (Binding):

A) Make sure the cover key is available.

B) Push on the paddle bar to open the door - with the door open, reset alarm.

C) Keeping the door open, use the key to turn the *control cylinder (IKC)* key clockwise and counter-clockwise.
Bolt should extend and retract freely.

D) If the bolt and key worked freely, the problem is alignment between the bolt and the keeper/strike.

E) If step "B" does not conform, remove the cover (see step 1B and C).

F) Remove the *cylinder housing (Cam bridge Assembly)*.

ECL-230D ANNUAL MAINTENANCE TESTS

With the key removed, confirm the index markings (Fig. 1 Rear View).

G) If the timing marks do not line up then reinstall the cylinder (per instructions).

H) If the cylinder turns hard, the tail piece is too long and needs to be cut as Fig. 2. Fig. 2 denotes Detex cylinder ECL-445, 5 pin. For 6-7 pin rim cylinder use ECL-1595 escutcheon and cut tailpiece accordingly.

I) Insert the key in the cylinder and turn it clockwise/counter-clockwise. The cam and the key should turn freely. If the key turns, but not the cam, the *cylinder tail piece* was cut too short and has slipped out of the cam - Replace the tailpiece or the cylinder (Fig. 2).

3. If the bolt does not retract/extend using the outside key control (OKC):

A) Remove the unit from the door

B) From the rear side of the casting - confirm the retaining spring was removed (Fig. 3).

C) Confirm the OKC shaft/cam is not broken and the push nut is in place.

D) Confirm the tailpiece length is 5/8" beyond the door or beyond the reinforcing plate (Fig. 3).

E) Confirm the index mark alignment (Fig 3).

F) While the unit is off the door, check the OKC operations. Using a screw driver, turn the cam clockwise/counter-clockwise.

G) Retract the bolt, align the index marks, remove key, re-install the lock body (make sure the alignment mark does not move when reinstalling the lock body). Be sure the cylinder tailpiece is engaging the cross slot on the cam (Fig. 3)

ECL-230D ANNUAL MAINTENANCE TESTS

4. Siren continues to sound after resetting the alarm (Bolt extended):

A) Retract the bolt

B) Remove the cover (see step 1 B & C).

C) Disconnect the battery

D) Identify the screws holding the Cam Bridge and remove the screws and Cam Bridge. Inspect switch levers. Make sure switch levers are not damaged or missing.

E) If siren still continues to sound after resetting the alarm call Detex Customer Service Department at 1-830-629-2900.

ANNUAL OUTSIDE KEY CONTROL (OKC) CHECK

Using OKC key extend / retract bolt. Unit should not sound and door should be free to open.

MAINTENANCE / INSPECTION LOG

DOOR No.	DATE OF INSP.	BATTERY COND.*	DOOR No.	DATE OF INSP.	BATTERY COND.*

MAINTENANCE / INSPECTION LOG

DOOR No.	DATE OF INSP.	BATTERY COND.*	DOOR No.	DATE OF INSP.	BATTERY COND.*

MAINTENANCE / INSPECTION LOG

DOOR No.	DATE OF INSP.	BATTERY COND.*	DOOR No.	DATE OF INSP.	BATTERY COND.*

MAINTENANCE / INSPECTION LOG

DOOR No.	DATE OF INSP.	BATTERY COND.*	DOOR No.	DATE OF INSP.	BATTERY COND.*

ECL-230D AND ECL-230D-PH OKC MAINTENANCE

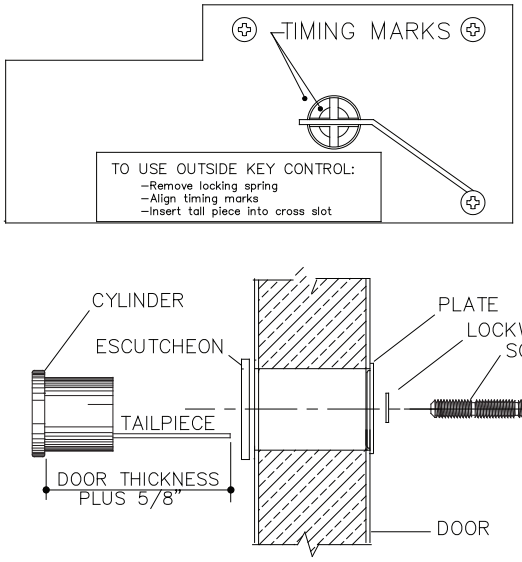

ACAD DWG 230-006

FIG. 3

ECL-230D AND ECL-230D-PH LUBRICATION DIAGRAM

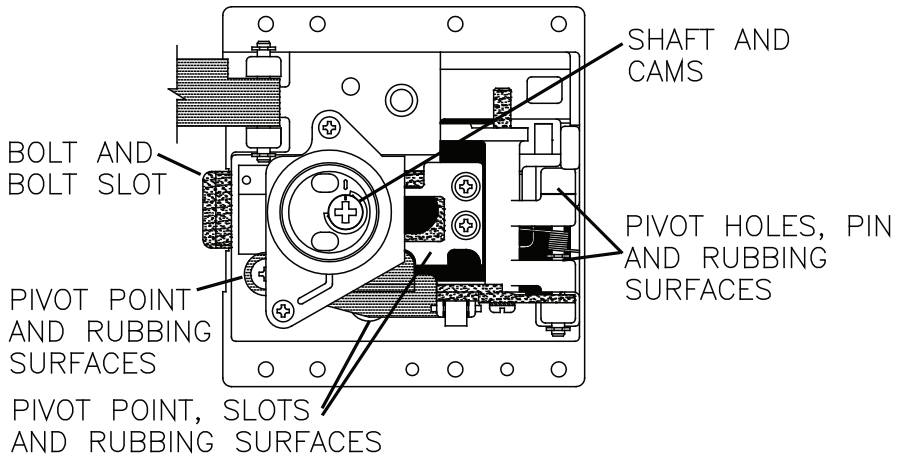

ACAD DWG 230-033

ECL-230D AND ECL-230D-PH IKC MAINTENANCE

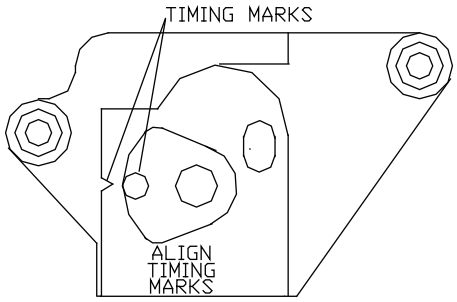

FIG. 1

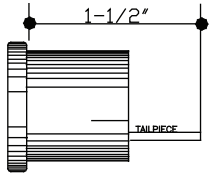

FIG. 2

ACAD DWG 230-034

ECL-230D AND ECL-230D-PH MAINTENANCE PARTS

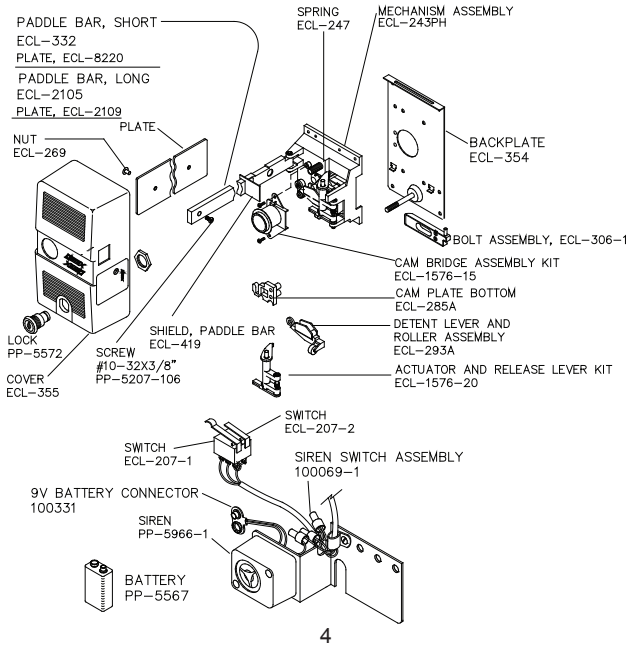

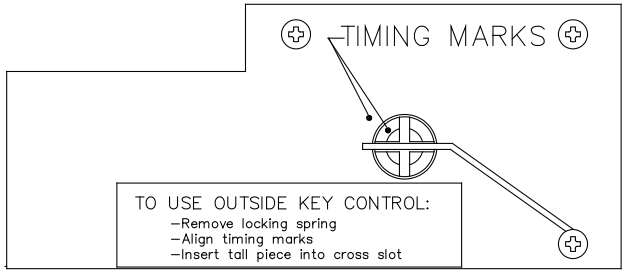
TIMING MARKS
TO USE OUTSIDE KEY CONTROL:
–Remove locking spring
–Align timing marks
–Insert tall piece into cross slot

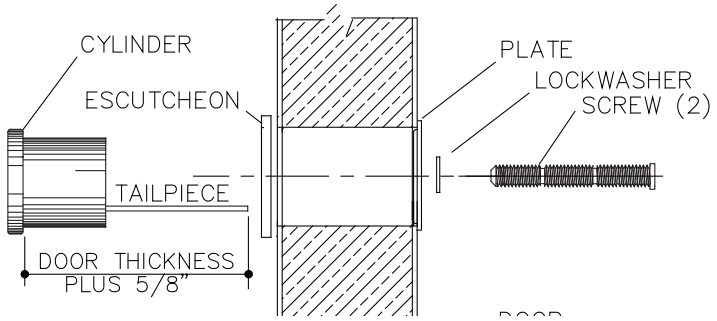
CYLINDER
ESCUTCHEON
TAILPIECE
DOOR THICKNESS
PLUS 5/8"
PLATE
LOCKWASHER
SCREW (2)

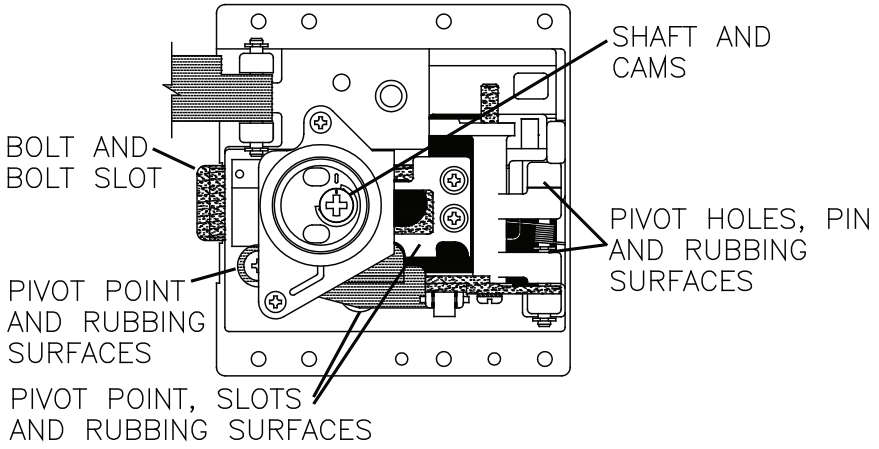
SHAFT AND
CAMS
BOLT AND
BOLT SLOT
PIVOT HOLES, PIN
AND RUBBING
SURFACES
PIVOT POINT
AND RUBBING
SURFACES
PIVOT POINT, SLOTS
AND RUBBING SURFACES

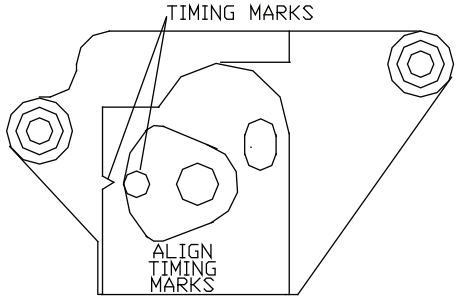
TIMING MARKS
ALIGN
TIMING
MARKS

FIG. 1

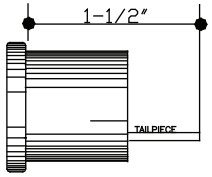
1-1/2"
TAILPIECE

FIG. 2

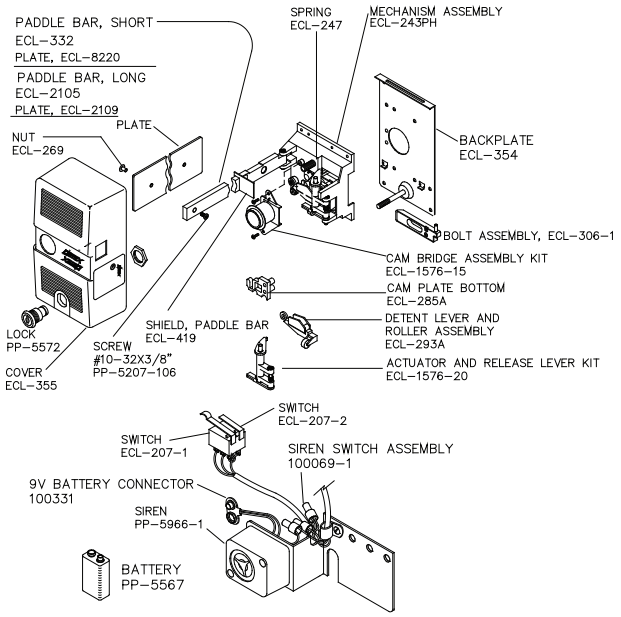
PADDLE BAR, SHORT
ECL–332
PLATE, ECL–8220
PADDLE BAR, LONG
ECL–2105
PLATE, ECL–2109
NUT
ECL–269
PLATE
SPRING
ECL–247
MECHANISM ASSEMBLY
ECL–243PH
BACKPLATE
ECL–354
BOLT ASSEMBLY, ECL–306–1
CAM BRIDGE ASSEMBLY KIT
ECL–1576–15
CAM PLATE BOTTOM
ECL–285A
DETENT LEVER AND
ROLLER ASSEMBLY
ECL–293A
ACTUATOR AND RELEASE LEVER KIT
ECL–1576–20
LOCK
PP–5572
COVER
ECL–355
SCREW
#10–32X3/8"
PP–5207–106
SHIELD, PADDLE BAR
ECL–419
SWITCH
ECL–207–2
SWITCH
ECL–207–1
SIREN SWITCH ASSEMBLY
100069–1
9V BATTERY CONNECTOR
100331
SIREN
PP–5966–1
BATTERY
PP–5567