REVERSIBLE
PANIC / FIRE EXIT
RIM DEVICES

INSTALLATION INSTRUCTIONS

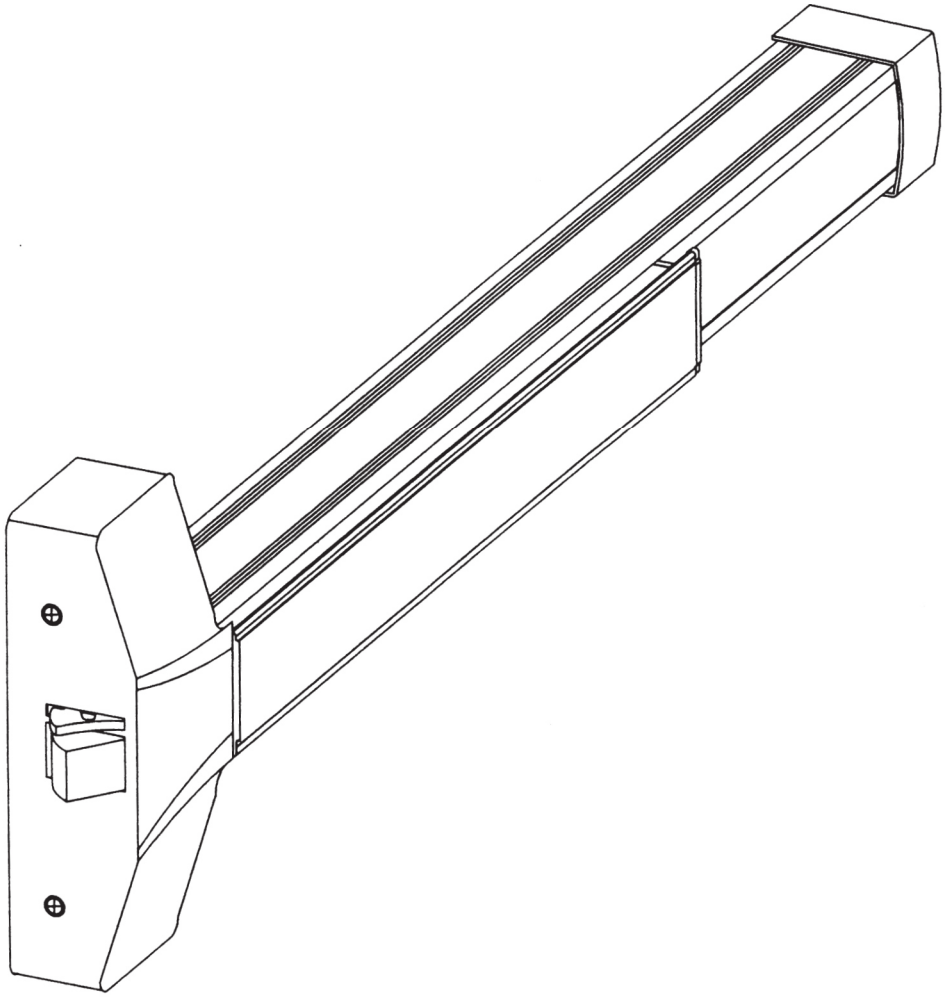

These instructions are presented in step by step sequence. Attach a template to tape to your door and frame as an aid to prepare for device mounting.

Please read thoroughly before installation.

NAME OF MAIN PARTS

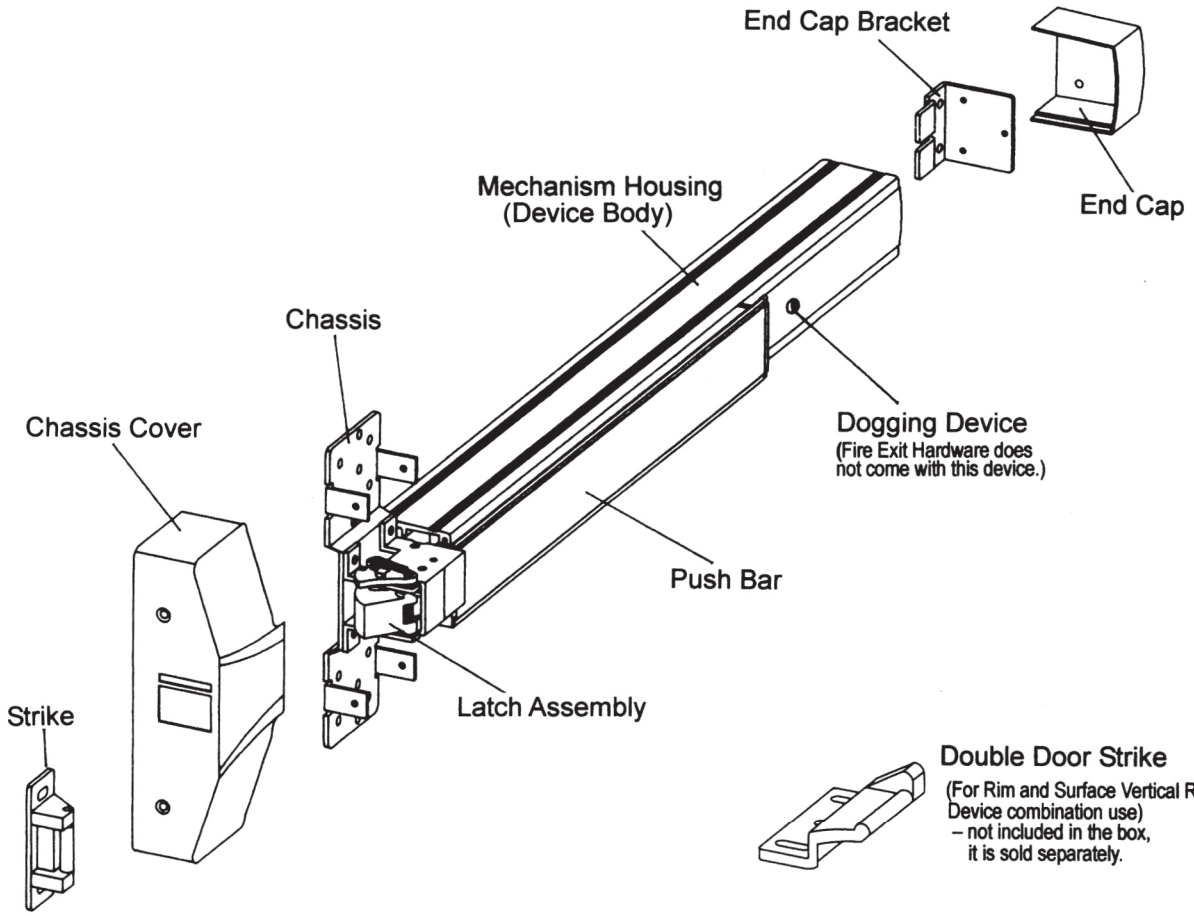

DOOR HANDING

Use this diagram to determine the hand of door.

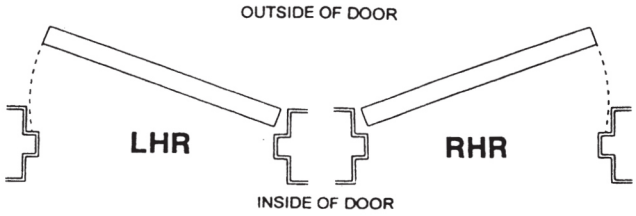

DOOR APPLICATIONS

SINGLE DOOR	DOUBLE DOOR WITH MULLION	DOUBLE DOOR WITHOUT MULLION
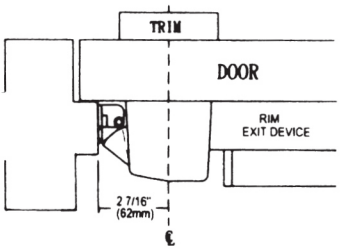	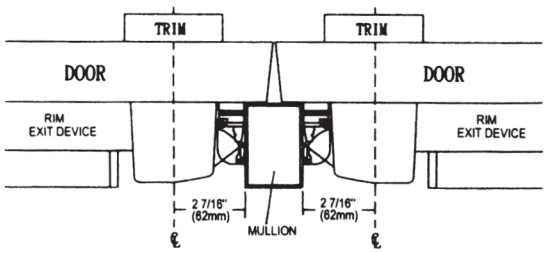	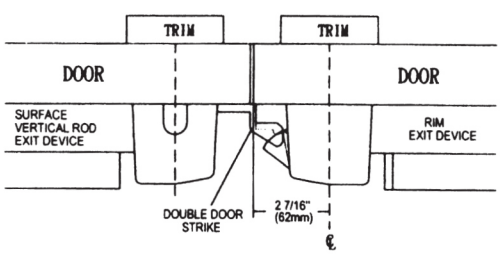

STEP 1 : MEASURE AND CUT DEVICE TO LENGTH

The exit device has two sizes: one sized for a 36" door width and one sized for a 48" door width. For 36" or 48" wide doors, no cutting required, skip to next step.

1) Measure door opening (door width).
2) Measure exit device length NOT including end cap.
3) Exit device is better 4" shorter than door width.
4) For other door widths, cut exit device to appropriate length. Be sure the end of device body and cover plate are flush before cutting.

Note: Device must be cut square for proper end cap fit.

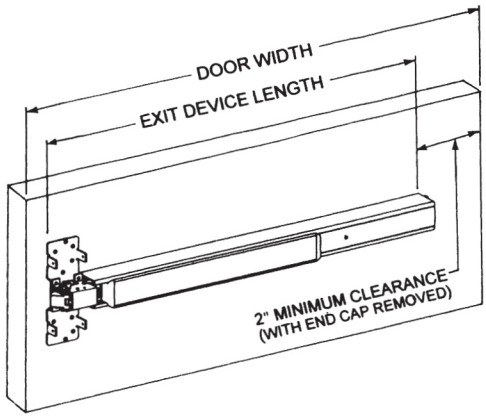

STEP 2 : MARK AND DRILL MOUNTING HOLES

1) Mark center line of exit device by drawing a line across the door and stop 40" above finished floor as shown at right.
2) Fold or apply template and align center lines on template with center lines on door then mark locations of the exit device 4 mounting holes as shown on template.
3) Move template up against stop then mark 3 mounting holes for strike.
4) Drill holes marked on door and jamb or mullion.

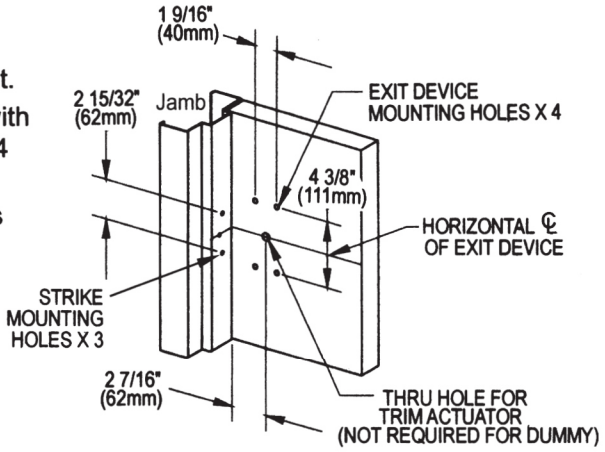

STEP 3 : INSTALL EXIT DEVICE

A. Device Body Installation

1) Remove chassis cover from the latch assembly and chassis. Mounting device body horizontally to the drilled position by supplied mounting screws or sex bolts (see No.1, 2, 3 , 4 on the picture below).
2) If using trim, be sure to line up trim actuating shaft (tailpiece) with cam located on back of device chassis. Details see the installation instructions and template of the trim.

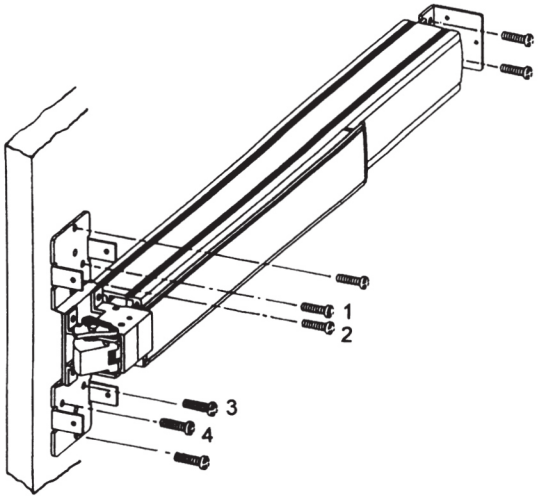

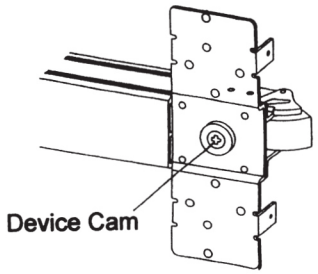

INSERT TRIM ACTUATING SHAFT
INTO DEVICE CAM " + "

B. End Cap Bracket Installation

1) Remove end cap from end cap bracket. Mark hole locations by either using template or holding end cap bracket up against door. Be sure the exit device is level before inserting end cap bracket lip into end of device body.
2) Mark, drill and tap two mounting holes.
3) Install end cap bracket with supplied screws.

STEP 4 : INSTALL STRIKE

1) Place strike to the drilled position then using supplied screws to mount only the top and bottom slotted holes first.
2) Open and close door to verify latch and dead latch are aligned properly.
3) Adjust strike if it is tight fit or loose fit. See the figure shown.
4) Once strike is adjusted, secure center screw.

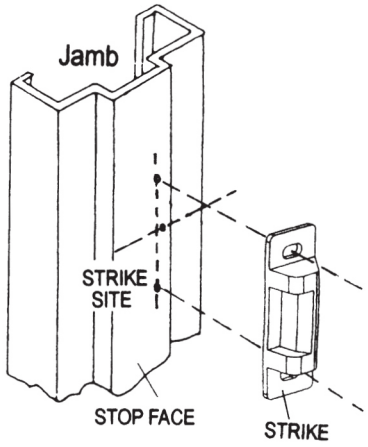

STEP 5 : INSTALL COVERS

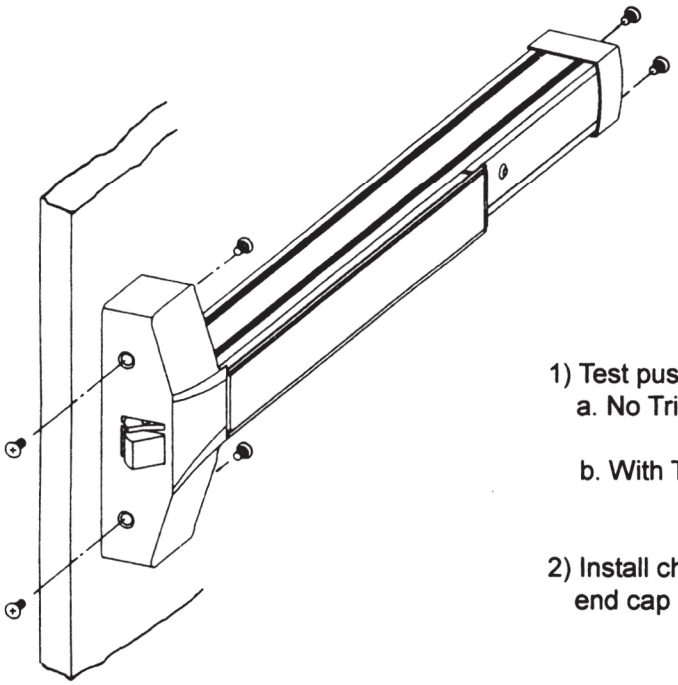

1) Test push bar operation before installing chassis cover.
   a. No Trim: The door can be opened smoothly when push bar is depressed down.
   b. With Trim: The door can be opened smoothly when key or lever/knob handle is operated.

2) Install chassis cover on chassis, and install end cap on end cap bracket by provided screws.

STEP 6 : DOG DEVICE

Dogging device during high traffic period of the day will greatly extend life of this device. (A dogging device is not available on fire rated models as fire door must remain closed and latched.)

Dogging:
Depress push bar, insert dogging hex wrench, and turn clockwise 34 degrees. The push bar will remain depressed and the latch will stay retracted.

Release Dogging:
Hold push bar, insert dogging hex wrench, and turn counterclockwise 34 degrees. The push bar will return to the up position and latch will extend to lock door.

