TOP JAMB INSTALLATION
INSTRUCTIONS FOR A LEFT HAND DOOR

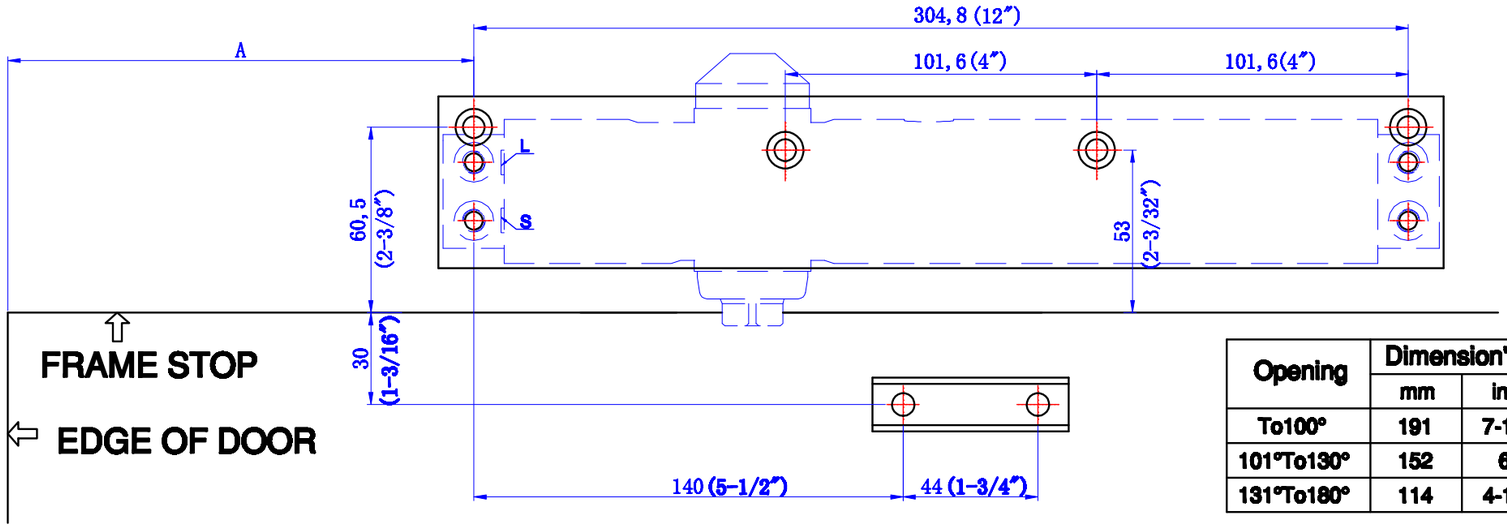

Opening	Dimension"A"	
	mm	inc
To100°	191	7-1/2"
101°To130°	152	6"
131°To180°	114	4-1/2"

TOP JAMB INSTALLATION
INSTRUCTIONS FOR A RIGHT HAND DOOR

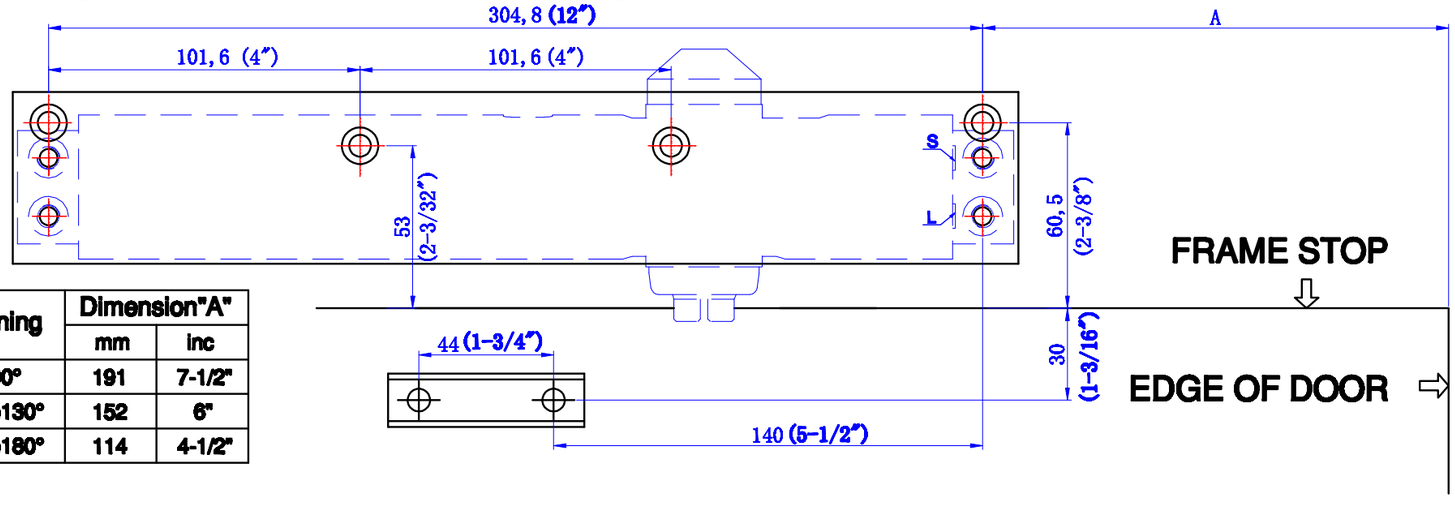

Opening	Dimension"A"	
	mm	inc
To100°	191	7-1/2"
101°To130°	152	6"
131°To180°	114	4-1/2"