PARALLEL ARM MOUNTING (PUSH SIDE)

TECHNICAL DIMENSIONS :

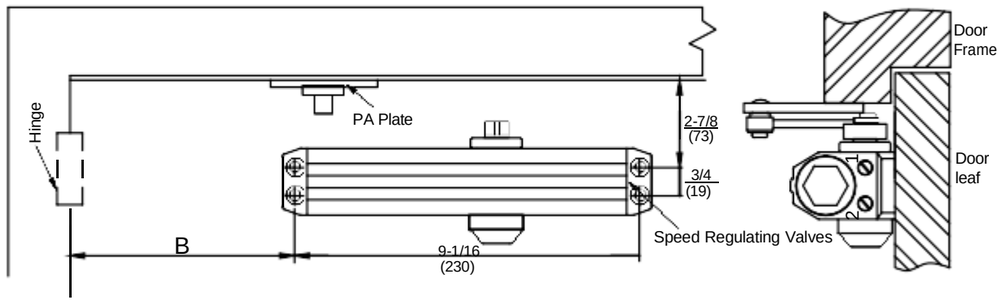

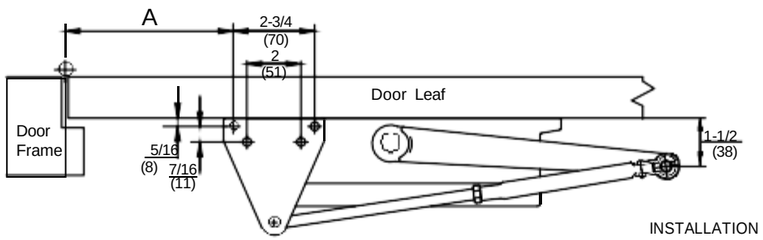

Left hand door illustrated same dimensions apply to right hand door.
Measured from hinge Center.
Dimensions are in inches (mm)
Do not scale drawing

Dimension: / Model No.:	Dimension"A"		Dimension"B"		Opening Angle
	Inch	mm	Inch	mm	
DCL2000	7-3/4	197	6-1/8	156	130°
	5-3/4	146	4-1/8	105	180°



INSTALLATION STEPS:

1. Select opening angle of the door. Use dimensions shown in chart and illustration above to drill mounting holes on door frame and leaf.
2. Attach closer to door leaf with speed regulating valves back to hinge.
3. Attach PA plate to top frame as shown.
4. Remove foot from forearm as shown and discard it.
5. Install main arm on pinion shaft,Rotate pinion 45° toward hinge edge of door to align main arm letter"B"(Right hand door) or "A" (Left hand door) with pinion flat. Fasten with arm screw.
6. Fasten forearm to PA plate.
7. Adjust forearm length to set the arm elbow about 1-1/2"(38mm) from door when connected to main arm. Use washer and screw provided to secure pivot connetion.Tighten locknut.
8. Snap pinion cap over spindle at bottom.
9. Adjust closer.(Same to Page 2)

Caution

IMPROPER INSTALLATION OR REGULATION MAY RESULT IN PERSONAL INJURY OR PROPERTY DAMAGE. FOLLOW ALL INSTRUCTIONS CAREFULLY PLEASE.

DCL2000 SERIES DOOR CLOSER REGULAR ARM INSTALLATION

DEXTER COMMERCIAL HARDWARE

Model:□ Size 1-6

MOUNTING APPLICATIONS:

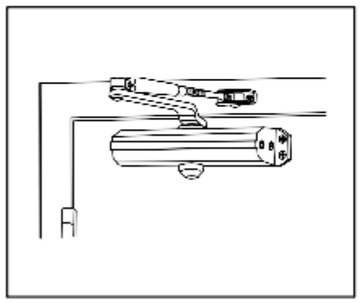

Regular Arm(Pull Side)

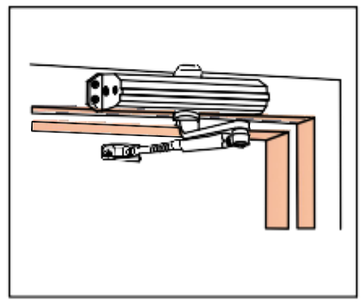

Top Jamb(Push Side)

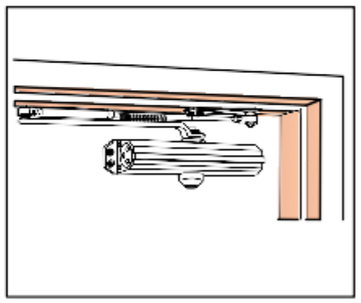

Parallel Arm(Push Side)

Caution PLEASE READ THIS INSTRUCTION CAREFULLY BEFORE INSTALLATION; WE **WON'T** BE RESPONSIBLE FOR ANY RESULTS WHICH ARE CAUSED BY THE WRONG MOUNTING WAYS.

PARTS OF CLOSERS

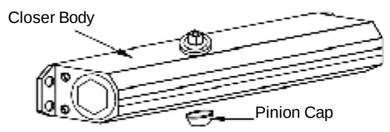

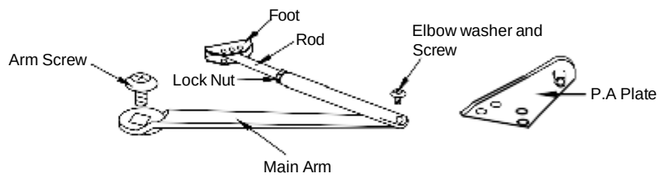

HAND OF DOOR.

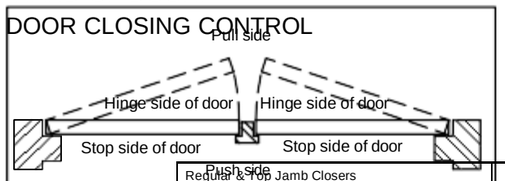

POWER SIZE SETTING AND DOOR WIDTH

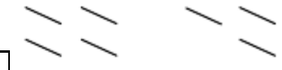

DOOR CLOSING CONTROL

Regular & Top Jamb Closers				Parallel Arm Closers			
Maximum Size of Door							
Closer Size	Interior	Exterior Inswing	Exterior Outswing	Closer Size	Interior	Exterior Outswing	Full 360° Turns
1	28"			1			-4 Turns C.C.W
2	36"			2	30"		0 Turn
3	42"	30"	36"	3	36"	30"	4 Turns C.W
4	48"	36"	42"	4	42"	36"	12 Turns C.W
5	54"	42"	48"	5	48"	42"	16 Turns C.W
6	60"	48"	54"	6	54"	48"	20 Turns C.W

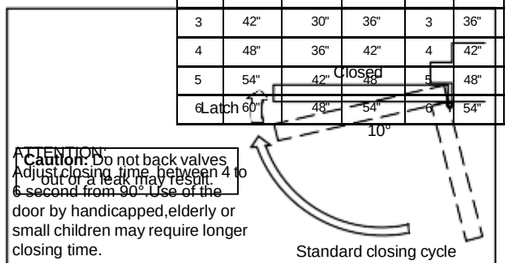

ATTENTION:
Caution: Do not back valves out or a leak may result.
Adjust closing time between 4 to 6 second from 90°.Use of the door by handicapped,elderly or small children may require longer closing time.

Adjusting the foot for closing power
Move foot pivot to hole as illustrated below

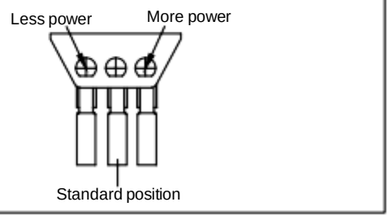

P1

Hinge edge of do

Sweep

P4

REGULAR ARM(PULL SIDE)

TECHNICAL DIMENSIONS

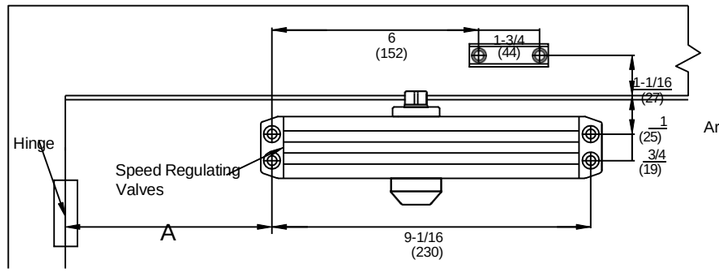

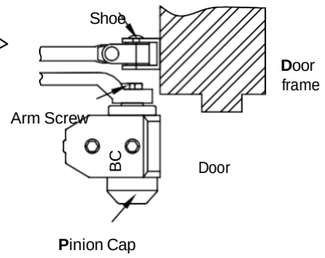

Model No.:	Dimension"A" Inch	mm	Opening Angle
DCL2000	6	152	120°
	3-1/2	89	1 0°

Right hand door illustrated same dimensions apply to left hand door.
Measured from hinge Center.
Dimensions are in inches (mm)
Do not scale drawing

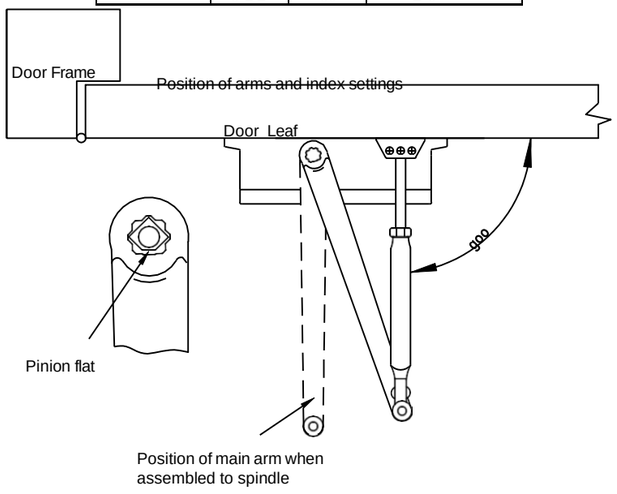

INSTALLATION STEPS:

1. Select opening degree of the door.Use Dimensions as shown to drill mounting holes on door leaf and frame.
2. Assemble main arm to closer pinion spindle.
3. Attach the closer body to door leaf with speed regulating valves toward hinge.
4. Attach the foot and rod to the door frame.
5. Adjust length of the forearm to position forearm at right angle to the door leaf when connected to main arm at elbow. Use Washer and screw provided to secure pivot connection.Tighten locknut on forearm.
6. Snap pinion cap over spindle at bottom of closer.
7. Adjust closer.

POWER SIZE AND BACK CHECK ADJUSTMENT

Adjust the spring power as chart in page 1. DO NOT exceed the maximum turns.The spring power has been preset on size 2 in factory.Turn this screw clockwise to increase or counter clockwise to decrease power.

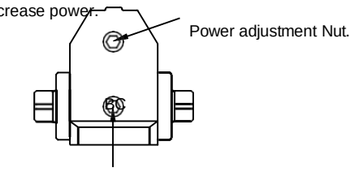

Turn BC regulating valve clockwise for a harder cushion and counter-clockwise for a softer cushion.NEVER close this valve completely.

SWEEP AND LATCHING SPEED ADJUSTMENT

Turn speed regulating valve colockwise to slow down or counter clockwise to speed up door movement.

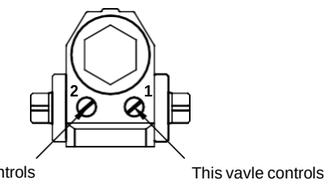

Caution

IMPROPER INSTALLATION OR REGULATION MAY RESULT IN PERSONAL INJURY OR PROPERTY DAMAGE. FOLLOW ALL INSTRUCTIONS CAREFULLY PLEASE.

TOP JAMB MOUNTING (PUSH SIDE)

TECHNICAL DIMENSIONS

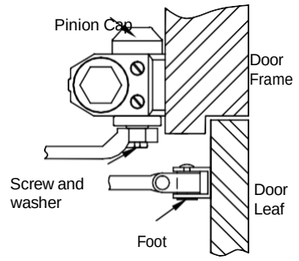

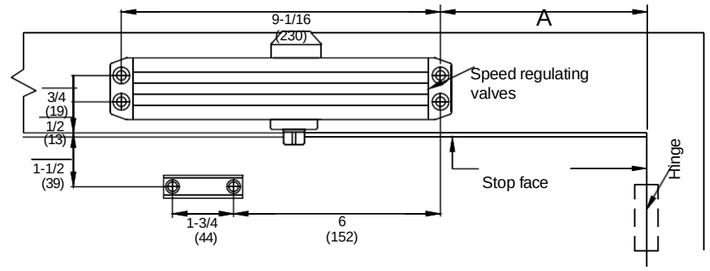

Model No.:	Dimension"A" Inch	mm	Opening Angle
DCL2000	6	152	120°
	3-1/2	89	1 0°

Right hand door illustrated same dimensions apply to left hand door.
Measured from hinge Center.
Dimensions are in inches (mm)
Do not scale drawing

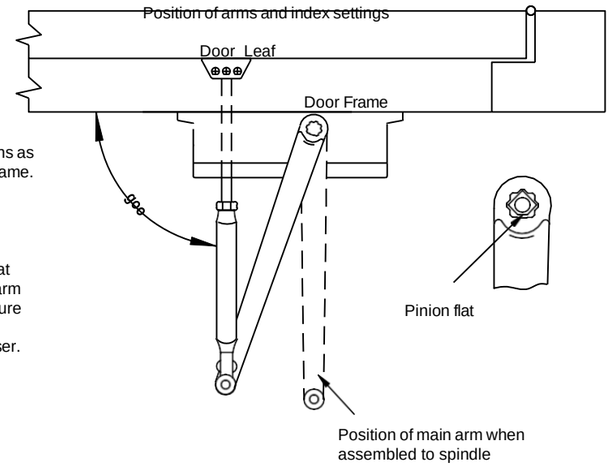

INSTALLATION STEPS:

1. Select opening degree of the door.Use Dimensions as shown to drill mounting holes on door leaf and frame.
2. Assemble main arm to the closer spindle.
3. Attach the closer body to door frame with speed regulating valves toward the hinge.
4. Attach the foot and rod on the door leaf.
5. Adjust length of the forearm to position forearm at right angle to the frame when connected to main arm at elbow. Use Washer and screw provided to secure pivot connection.Tighten locknut on forearm.
6. Snap pinion cap over spindle at bottom of the closer.
7. Adjust closer. (Same to Page 2)

Caution

IMPROPER INSTALLATION OR REGULATION MAY RESULT IN PERSONAL INJURY OR PROPERTY DAMAGE. FOLLOW ALL INSTRUCTIONS CAREFULLY PLEASE.