2000 Series e/eM Style Keypad Installation and Programming Guide

Models 2000e and 2000eM

Specifications

Parameter	Specifications
Voltage Requirements	10-30 VDC; 12-24VAC
Keypad Current Requirements (Max)	**VDC** / **VAC** 10V: 85mA / 12V: 150mA 30V: 115mA / 24V: 200mA
Keypad with Output Expansion Module (2000-8EX) Current Requirements (Max)	**VDC** / **VAC** 10V: 230mA / 12V: 500mA 30V: 390mA / 24V: 700mA **Note:** This is total maximum current including keypad and output module.
Relay Contact Rating	2A @ 30VDC (Main & Aux)
REX Input	Normally Open Dry Contact
Door Position Switch Input	Normally Closed Dry Contact
Mechanical Dimensions	4.50" H x 2.75" W x 0.60" D
Environment	Indoor or Outdoor
Temperature Tolerance	-31°F to 151°F (-35ºC to 66°C)
Front End Cable Type	Stranded and Shielded
Front End Distance and Wire Gauge	1000 Ft. – 18AWG; 500 Ft – 20 AWG; 250 Ft. – 22 AWG
Firmware Version	1.0x ("1" is the major version; "0" is the minor version; "x" is a minor version, reserved for bug fixes, which is indicated with a letter, such as "a".)

Technical Support

Service Company: To contact IEI's Technical Support department, call 1- 800-343-9502, Monday through Friday. Questions can also be submitted through our website at www.ieib.com.

End User: Please contact your service company.

> **Note:** For additional information about installing and programming the 2000e/2000eM keypad please contact IEI at 1- 800-343-9502

Keypad Operating Modes

The 2000e/2000eM keypad has three operating modes: Standalone Mode, Secured Series Front End Mode and Wiegand Front End Mode. Below is a brief explanation of each mode. Refer to the programming section for details about selecting each mode.

Standalone Mode:

By default, the keypad is programmed for Standalone Mode. In this mode, all the users and other programming options are maintained within the keypad and no additional controller is required. The lock and all other inputs and outputs are connected directly to the keypad.

Secured Series Front End Mode:

In Secured Series Front End mode, an IEI Secured Series Controller is required. The IEI Secured Series Controller maintains the users and programming options and makes all the access control decisions. The locking device and all inputs and outputs are connected to the controller. The 2000e/eM keypads were evaluated by UL, in Secured Series Front End mode, for use only with the IEI Hub Max II and Hub MiniMax II products.

Wiegand Front End Mode:

In Wiegand Front End mode, a separate Wiegand Access Control panel is required. When you enter a code on the keypad it is then sent to the control panel as Wiegand card data, depending on which format you've programmed it for. The control panel maintains the users and programming options and makes all the access control decisions. The locking device and all inputs and outputs are connected to the control panel. The 2000e/eM keypads were evaluated by UL, in Wiegand Front End mode, for use only with the IEI Hub Max II and Hub MiniMax II products used in conjunction with the Wiegand Interface Module.

Mounting the Keypad

The keypad is designed to be flush mounted using a standard UL Listed single-gang electrical box. Mounting height can vary depending on requirements. An appropriate range is typically between 48 and 52 inches on center off the floor.

For outdoor installations, use a UL Listed weatherproof back box and seal the wire entry locations with silicone and provide a drain hole. For additional protection, install the provided foam gasket between the keypad and the back box. In addition, use the anti-oxidant grease pack for the wire harness connectors.

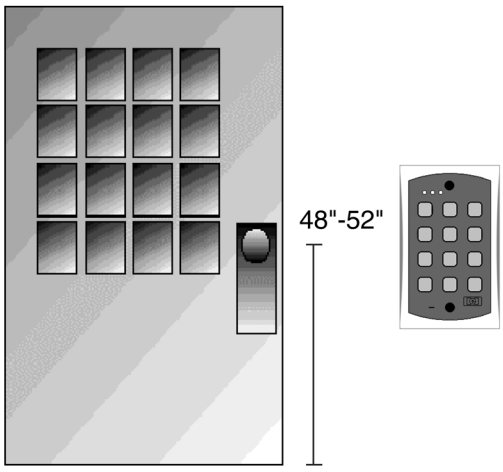

Circuit Board Diagram

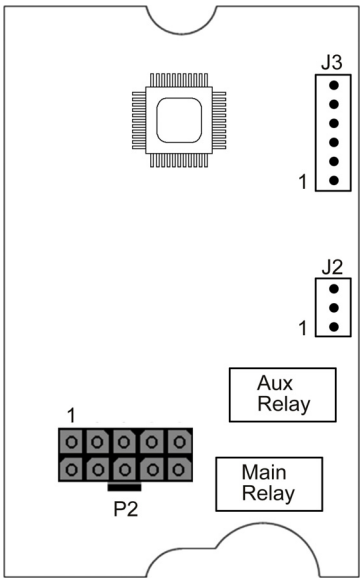

Note: J3 is for use only with the 2000-8EX Output Module.

Main Wire Harness (P2)

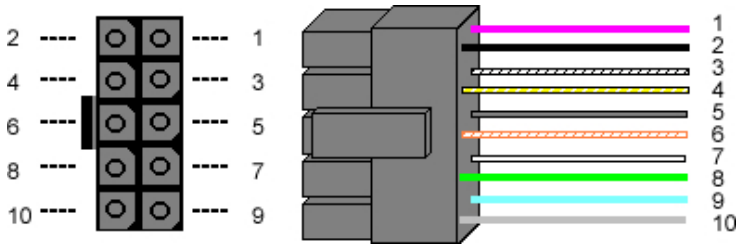

Pin	Wire Color	Description
1	Red	V+ (Keypad Power)
2	Black	V- (Keypad Power)
3	White/Black	Wiegand Data 0/Secured Series Data
4	White/Yellow	Wiegand Data 1/Secured Series Data
5	Brown	Request to Exit (REX)/LED1
6	White/Orange	Loop Common
7	White	Door Position Switch Input
8	Green	Main Relay Normally Open
9	Blue	Main Relay Common
10	Gray	Main Relay Normally Closed

Auxiliary Relay Wire Harness (J2)

Pin	Wire Color	Description
1	Green	Aux Relay Normally Open
2	Blue	Aux Relay Common
3	Gray	Aux Relay Normally Closed

UL Requirements

The 2000e/2000eM keypad is a UL Listed access control unit. This section contains information regarding the requirements necessary to meet UL compliance.

Wiring methods shall be in accordance with the National Electrical Code (ANSI/NFPA70), local codes, and the authorities having jurisdiction.

All wires and cables used must be a minimum of 22 AWG, stranded and shielded UL Listed and/or recognized wire suitable for the application. In addition, input and output cables that extend from the unit must be shielded, twisted pair. Ground the shield only at one end, usually the circuit end.

All interconnecting devices (ie. door contacts, REX, locking devices, alarm devices, doorbell, etc.) must be UL Listed.

A UL Listed access control power limited power supply, capable of 4 hours standby, must be used to power the keypad.

A minimum of three user codes must be programmed for controlling access.

The following Wiegand card formats were not evaluated by UL: 28-bit, 29-bit, 30-bit, 31-bit, 32-bit or 36-bit (formats 2-8 from wiegand format chart. UL did evaluate the 26-bit card format (format 1).

8-Bit Burst Mode was not evaluated by UL.

Installing a Tamper Switch

To meet UL requirements, a UL Listed tamper switch must be installed in a UL Listed single-gang box used for mounting the keypad. The tamper switch must activate if the keypad is removed from the box and must disconnect power from the lock. The lock must be a fail-secure device, meaning the lock remains locked when power is removed.

In addition, once the tamper device is activated, it must be configured so that it can only be reset from within the protected area. Only a Sentrol 3012 or Sentrol 3025T tamper switch can be used. The diagrams below show the suggested mounting location for each device.

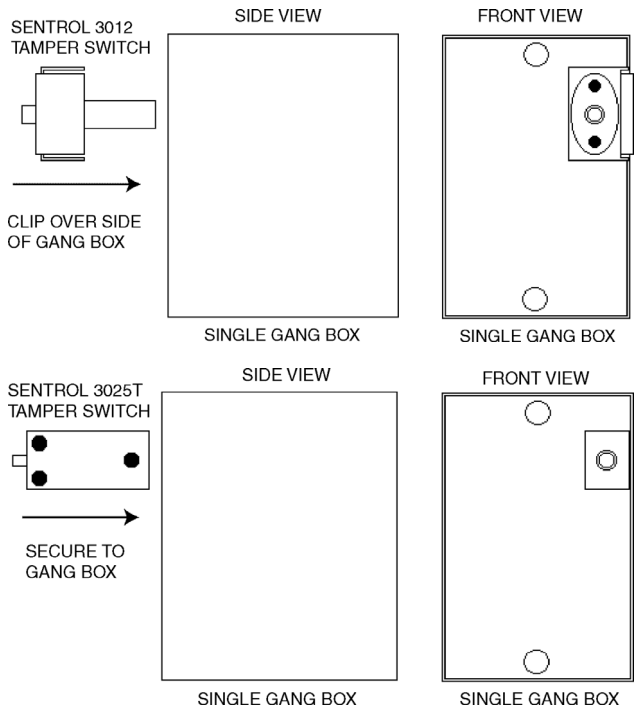

Wiring a Maglock (Fail-Safe)

1. Connect the red wire (V+) to the blue wire (common), and then connect them to the positive on the power supply.
2. Connect the gray wire (normally closed) to the positive on the Maglock.
3. Connect the black wire (V-) to the negative on the Maglock, and then connect them both to the negative on the power supply.

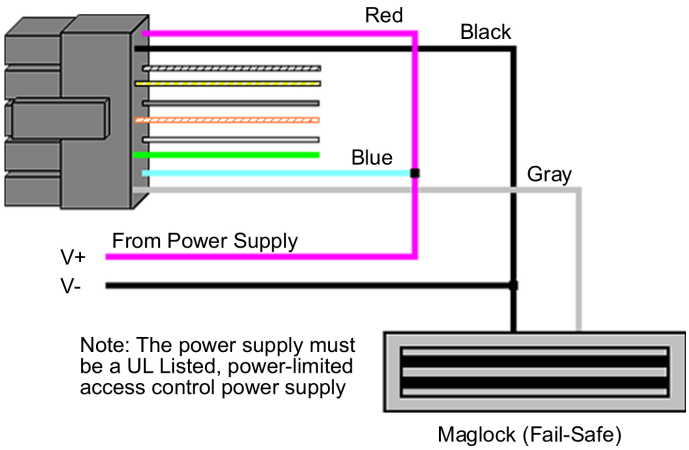

Wiring an Electric Door Strike (Fail-Secure)

1. Connect the red wire (V+) to the blue wire (common), and then connect them to the positive on the power supply.
2. Connect the green wire (normally open) to the positive on the strike.
3. Connect the black wire (V-) to the negative on the strike, and then connect them both to the negative on the power supply.

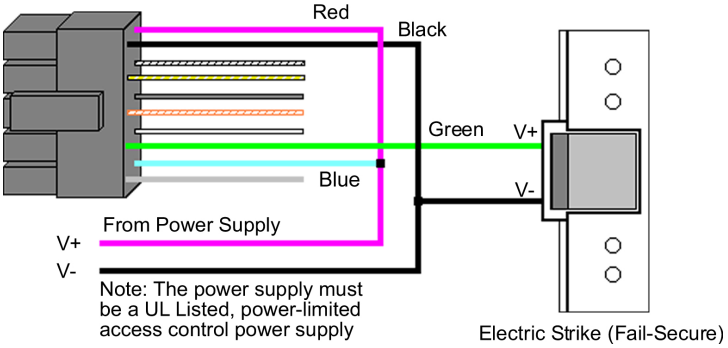

Shunting a Normally Closed Zone

1. Connect the blue wire (common) to the common connection on the door position switch.
2. Connect the green wire (normally open) to the normally closed connection on the door position switch.

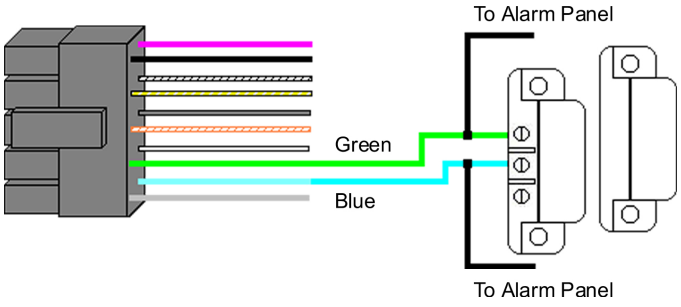

Wiring the REX and Door Position Switch

1. Connect the brown wire (REX Input) to the normally open connection on the REX device.
2. Connect the white/orange wire (loop common) to the common on the REX device and the common on the door switch.
3. Connect the white wire (door loop) to the normally closed connection on the door switch.

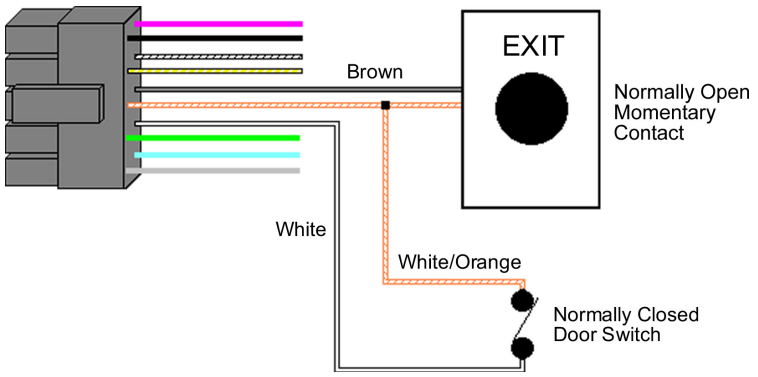

Note: By default, the forced door and propped door outputs are assigned to the audio alerts. When you power up the keypad for the first time and door contacts are not connected, you may hear audio alert #1 immediately followed by audio alert # 2 thirty seconds later. If you are not using door contacts you must either short the white and white/orange wires together or disable the audio alerts.

Secured Series Front End Wiring Diagram

To use the keypad as a Secured Series Front End, connect the red, black, white/black and white/yellow wires, on the main keypad wire harness, to the corresponding terminals on the Secured Series Door Control Module. The drain wire must be connected at the controller side only. Refer to the wiring distance and gauge in the specifications chart.

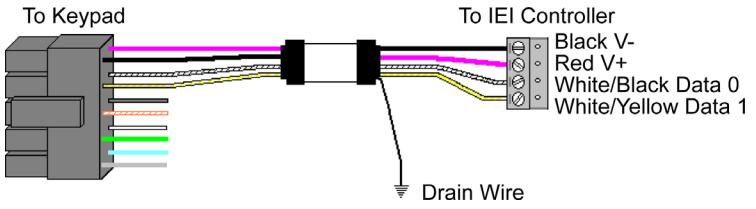

Wiegand Front End Wiring Diagram

To use the keypad as a Wiegand Front End, connect the red, black white/black, white/yellow and brown wires on the main keypad wire harness to the corresponding terminals on the Wiegand Control Panel. The drain wire must be connected at the panel side only. Refer to the wiring distance and gauge in the specifications chart.

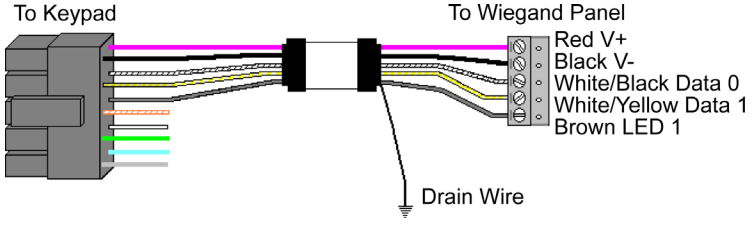

Changing the Master Code

The first step in setting up your keypad is to enter program mode and change the master code. The default master code is 1234.

1. Enter Program Mode
   Press: **99 # master code *** (Yellow LED Flashes Slowly)
2. Change Master Code
   Press: **1 # new master code * repeat code ***
   (Yellow LED Flashes Slowly)
3. Exit Program Mode
   Press: ***** (Yellow LED Stops Flashing)

Programming a Supervisor Code

Use the following command sequence to program a supervisor code, which is stored user location 2. The supervisor is only allowed to add, delete and disable users .

1. Enter Program Mode
   Press: **99 # master code *** (Yellow LED Flashes Slowly)
2. Change Supervisor Code
   Press: **2 # supervisor code * repeat code ***
   (Yellow LED Flashes Slowly)
3. Exit Program Mode
   Press: ***** (Yellow LED Stops Flashing)

Selecting Secured Series Front End Mode

To select Secured Series Front End Mode, use the following steps:

1. Enter Program Mode
   Press: **99 # master code *** (Yellow LED Flashes Slowly)
2. Select Secured Series Front End Mode
   Press: **1032 # 0 # 2 # **** (Yellow LED Flashes Slowly)
3. Exit Program Mode
   Press ***** (Yellow LED Stops Flashing)

Selecting Wiegand Front End Mode

To select Wiegand Front End Mode, use the following steps:

1. Enter Program Mode
   Press: **99 # master code *** (Yellow LED Flashes Slowly)
2. Select Wiegand Front End Mode, press:
   1032 # 0 # 1 # ** (Yellow LED Flashes Slowly)
3. Exit Program Mode
   Press ***** (Yellow LED Stops Flashing)

Selecting Standalone Mode

Standalone Mode is the default operating mode. If you've changed the operating mode and want to revert back to Standalone Mode, use the following steps:

1. Enter Program Mode
   Press: **99 # master code *** (Yellow LED Flashes Slowly)
2. Select Standalone Mode
   Press: **1032 # 0 # 0 # **** (Yellow LED Flashes Slowly)
3. Exit Program Mode
   Press ***** (Yellow LED Stops Flashing)

Programming Users

(Standalone Mode Only)

The unit can hold up to 500 users. Codes are 1 to 10 digits in length.

Command/Action	Keys to Enter/Details
Add Standard User (short)	**user location # code * code ***
Add Standard User with Specific Unlock Time	**unlock time # user location # code * code ***
Add Enhanced User	**60 # user type # user location # code * code ***
Add User to Trigger Specific Outputs (Lock, OUT2-10)	**59 # outputs # user location # code * code *** (1 = Lock, 2 = OUT2, 3 = OUT 3, Etc)
Disable User	**56 # 0/1 # user location # **** (0 = enabled; 1 = disabled)
Delete User	**user location # ****

User Types

(Standalone Mode Only)

User Types	Description
Toggle User (0)	A toggle user latches the Lock Output like an on/off switch. When you enter the code the first time, the Lock Output is activated and remains activated until you enter any toggle code.
Standard User (1)	This user type is a standard timed user that activates the lock output for the time duration programmed with command 11 or with the master code.
Lockout User (3)	A Locks Out User is used to lock out users from the keypad. After entering a lock out code, users in a higher user location are denied access. To clear a lock out, enter the same lock out code you used to enter lock out mode.
Single Use Code (5)	This user code can only be used once. After entering the code, the user is deleted from memory. To verify a single use code is still programed, enter 5 # code *. If the code wasn't used, the green LED flashes for ½ a second.
Emergency User (7)	An emergency user operates as a standard timed user, with one exception, it can't be Locked Out by a lock out user.
Duress User (8)	The duress user is another type of emergency user. This user activates both the Lock and Duress Outputs. You would use this code if you wanted to activate an alarm, as well as gain entrance through the door.
Two-Part User Type A (9)	This user type is one half of a two-part user combination. When you enter a type A user code, you must enter a Type B user code to gain access through the door. After entering the code the bi-color LED alternates red and green. You have 15 seconds to enter the second code.
Two-Part User Type B (10)	This user type is the second half of a two-part user combination. After entering a Type B code you must enter a Type A code to gain access through the door.

Assigning Virtual Outputs to Physical Outputs

(Standalone Mode Only)

The keypad is equipped with nineteen Virtual Outputs and twelve Physical Outputs. Virtual Outputs are functions that you can assign to operate any Physical Output. Physical Outputs include the main relay and aux relay on the keypad, the eight relays on the 2000-8EX Output Module and the two audio alerts on the keypad..

- Using command 10, you can assign any Virtual Output to any Physical Output or disable a Physical Output.
- Each Physical Output can have multiple Virtual Output assigned to it.

Assigning Outputs

(Standalone Mode Only)

Command/Action	Keys to Enter/Details
Assign Outputs	**10 # virtual output # physical output # ****

Virtual Outputs	Physical Outputs
1 – Lock Output	1 – Main Relay
2 – Alarm Shunt	2 – Aux Relay
3 – Propped Door	3 – External Relay 1
4 – Forced Door	4 – External Relay 2
5 – OUT2	5 – External Relay 3
6 – OUT3	6 – External Relay 4
7 – OUT4	7 – External Relay 5
8 – OUT5	8 – External Relay 6
9 – OUT6	9 – External Relay 7
10 – OUT7	10 – External Relay 8
11 – OUT8	11 – Audio Alert 1
12 – OUT9	12 – Audio Alert 2
13 – OUT10	
14 – Duress Output	
15 – Panic Output (see page 5)	**Note:** The keypad is equipped with only two relays. The Output Expansion Module (2000-8EX) is required to use additional outputs.
16 – Keypad Active Output	
17 – Doorbell Output*	
18 – REX Input Active	
19 – Door Loop Input Active	

***Note:** The Doorbell Output also works in both Front End Modes.

Disable Virtual Output	**10 # virtual output # 0 # ****
Disable Physical Output	**10 # 0 # physical output # ****
Programming the REX/Door Loop Outputs (Lock, OUT2-10)	**49 # outputs # input # **** Outputs: Lock =1, OUT2 = 2, OUT3 = 3, OUT4 = 4, etc Input: REX = 0; Door Loop = 1)

Note: The default output settings are: Lock Output = Main Relay; Alarm Shunt = Aux Relay; Forced Door = Audio Alert 1; Propped Door = Audio Alert 2.

Programming Output Times

(Standalone Mode Only)

Command/Action	Keys to Enter/Details
Change Lock Output Time	**11 # time # 0 # **** (1-255 sec)
Set OUT2 Time Duration	**12 # ttt # mmm # ****
Set OUT3 Time Duration	**13 # ttt # mmm # ****
Set OUT4 Time Duration	**14 # ttt # mmm # ****
Set OUT5 Time Duration	**15 # ttt # mmm # ****
Set OUT6 Time Duration	**16 # ttt # mmm # ****
Set OUT7 Time Duration	**17 # ttt # mmm # ****
Set OUT8 Time Duration	**18 # ttt # mmm # ****
Set OUT9 Time Duration	**19 # ttt # mmm # ****
Set OUT10 Time Duration	**110 # ttt # mmm # ****
Set Propped Door Time	**44 # time # 0 # **** (10-990 sec)
Set Forced Door Time	**45 # time # 0 # **** (10-990 sec)

Note: OUT2-10: ttt = time units; mmm = multiplier. Ex: "12 # 2 # 5 # **" = 10 seconds (2 time units multiplied by 5 seconds = 10 seconds). The maximum value of ttt and mmm is 255 (255 x 255). The default output times (Lock Output, OUT2-10) are 5 seconds. To toggle the output enter 0 for both ttt and mmm; Ex: 12 # 0 # 0 # **.

Programming Keypad Options

(Default settings are in **bold**)

Command/Action	Keys to Enter/Details	
Change Keypad Options	**30 # option # setting # ****	
Option	**Setting**	
0 – Audio Keypress Feedback	0 = Disabled	**1 = Enabled**
1 – Visual Keypress Feedback	0 = Disabled	**1 = Enabled**
2 – Auto Entry	**0 = Disabled**	1 = Enabled
3 – Error Lockout	0 = Disabled	**1 = Enabled**
4 – User Lockout	0 = Disabled	**1 = Enabled**
5 – Two-Part Users	0 = Disabled	**1 = Enabled**
6 – Keypad Backlighting	0 = Disabled	**1 = Enabled**
7 – Keypad Backlight Dimming	0 = Disabled	**1 = Enabled**
8 – REX Processing Select	0 = Only when door closed	**1 = Always**
9 – Red LED Dimming	0 = Off when backlighting dim	**1 = Always On**
10 – Door Loop Output Processing	0 = Not when lock latched	**1 = Always**
16 – Secured Series In/Out	**0 = Records IN**	1 = Records Out
18 – 8-Bit Burst Output	**0 = Disabled**	1 = Enabled
19 – WFE Red LED Select	0 = Disabled	**1 = Enabled**
20 – WFE Red LED Active State	**0 = Low**	1 = High
21 – WFE Green LED Select	0 = Disabled	**1 = Enabled**
22 – WFE Green LED Active State	0 = Low	**1 = High**

Note: WFE means Wiegand Front End

Programming Keypad Parameters

(Default settings are in **bold**)

Command/Action	Keys to Enter/Details
Change Keypad Parameters	**32 # parameter # value # ****
Parameter	**Value**
0 – Duress Output Duration	1 – 255 Seconds (**default = 5**)
1 – Panic Output Duration*	1 – 255 Seconds (**default = 5**)
2 – Error Lockout Threshold	1 – 50 Attempts (**default = 3**)
3 – Error Lockout Duration	1 – 255 Seconds (**default = 10**)
4 – Auto-Entry Count	2 – 10 Digits (**default = 4**)
7 – Auto-Entry Keypress Timeout	2 – 15 Seconds (**default = 2**)
10 – Wiegand Format	1 – 8 (**default = 1, 26-Bit**)
11 – Wiegand Pulse Width	1 – 255 (**default = 8, 160µS**)
12 – Wiegand Interpulse Spacing	1 – 255 (**default = 32, 640µS**)
Note: Refer to the Wiegand Format Chart below for parameter 8.	
Change Wiegand Parameters	**34 # parameter # value # ****
Parameter	**Value**
0 – Wiegand Site ID	Refer to Wiegand Format Chart
1 – Wiegand Group ID	Refer to Wiegand Format Chart
Note: The default setting for both settings is 0.	

***Note:** The Panic Output is activated by pressing the * and # keys at the same time. This is used in case of emergency to activate an auxiliary alarm device, such as a siren, that is used to indicate an emergency condition only. This output should not be used to gain access. All access control functionality should be programmed and remain separate from the Panic Output functionality.

Resetting the Keypad

Note: This does not reset the keypad operating mode.

Command/Action	Keys to Enter/Details
Reset Defaults Only	**40 # 00000 # 00000 # ****
Reset Entire Keypad	**46 # 00000 # 00000 # ****

Wiegand Format Chart

The keypad supports the following Wiegand formats (parameter 10).

Format Value	Wiegand Format	Largest PIN Value	Largest Site Value	Largest Group Value
1	26 bit	65535	255	N/A
2	28 bit	32767	255	N/A
3	29 bit	524287	255	N/A
4	30 bit	65535	255	15
5	31 bit	65535	255	31
6	32 bit	8191	2047	63
7	36 bit	999999	1023	N/A
8	29 bit	524287	255	N/A

Wiegand Data

When the keypad is configured in Wiegand mode, the keypad data is sent as a complete Wiegand data packet, as though you presented a card.

For example, when programming a user into an IEI Door Control Module, you must program the user as though you were programming a card. After entering the command to program a card user, enter the code on the 2000e/eM keypad to send the data to the controller.

Please refer to the Wiegand Interface Module instructions 6065700 Rev 1.0, the HubMax II Instructions 6065034 Rev 3.4 and the Hub MiniMax II instructions 6055037 Rev 3.3 for complete details.

LED/Sounder Indications

Indicator	Description
Steady Red*	Door Locked
Steady Green*	Door Unlocked (timed or latched)
Yellow Flashing Slowly	Program Mode
Solid Yellow	Program Error or Error Lockout
Alternating Red/Green	Awaiting 2nd PIN of Two-Part User
LED's Cycling Left to Right	Over Voltage Warning
LED's Cycling Right to Left	Under Voltage Warning
3 Rapid Beeps	Invalid Code
Pair of Double Beeps	User Lockout Activated
Single Double Beep	User Lockout Canceled
1 Long Beep, 1 Short Beep	Access Denied, User Disabled
1 Long Beep, 3 Short Beeps	Access Denied, User Lockout
1 Long Beep, 5 Short Beeps	Access Denied, Code Mismatch
6 Quick Beeps	Toggle Mode Activated
Sounder ¼ sec on, ¼ sec off	Audio Alert 1
Beep Every 2 seconds	Audio Alert 2

***Note:** The Red/Green LED descriptions above are for Standalone and Secured Series Mode only. The operation of these LED's in Wiegand Mode is determined by the LED control wire (brown) and how it is configured. The LED control is configured using keypad options 19, 20, 21 and 22, which are programmed with command 30.

Wiring the 2000-8EX Output Module

If the Output Module is within 18 inches of the keypad, use the 6-conductor wire harness, supplied with the Output Module, to make the connection. If your Output Module is located more than 18 inches from the keypad (up to a maximum of 100 feet), you must cut the wire harness in half and plug one half into the keypad the other into the Output Module. Then connect the two using 22 AWG stranded and shielded cable. Make sure you connect the wire harness pin to pin (pin 1 on the Output Module to pin 1 on the keypad and so on). You must connect the drain wire from your cable to the negative on your keypad (the black wire to your power supply).

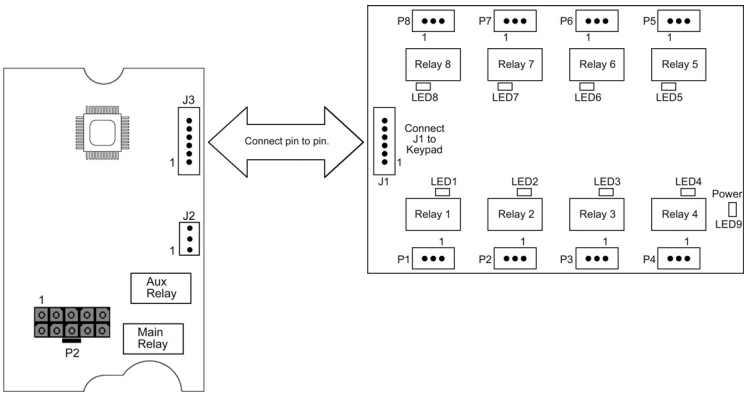

Performing the Programming Mode Loopback

The keypad has a special loopback connection you can make to enter program mode if you do not know the master code. Use the following steps below and refer to the diagram.

Note: This procedure should only be performed by a qualified security or lock industry professional.

1. Power down the keypad.
2. Connect the white/yellow, brown and white wires together and disconnect any other connections to these wires.
3. Power up the keypad
4. Change the master code or default the keypad
5. Power down the keypad and remove the loopback connections and reconnect any other wiring to these wires.
6. Power up the keypad.

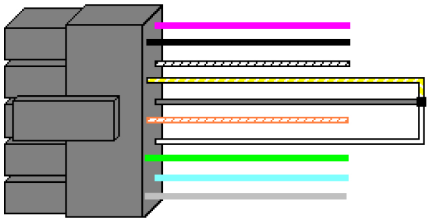

White/Yellow to Brown and White

Performing the Keypad Self-Test

After installing the keypad, IEI recommends that you perform the keypad self-test once a year to ensure that the keypad is working properly.

1. To perform the self-test, with the unit powered up, press the following keys on the keypad: **7890#123456***
2. If all 12 key presses are accepted, the keypad enters self-test mode.
3. The LEDs then turn on one at time with a beep in the following order Red, Yellow then Green.
4. After the Green LED, the unit then flashes an LED to indicate which operating mode the keypad is programmed mode. Below shows which LED flashes for each mode:
   - Standalone Mode: Red Flash
   - Wiegand Front End Mode: Green Flash
   - Secured Series Front End Mode: Yellow Flash followed by rapid yellow flicker.

Note: If the unit is not connected to a controller in Secured Series Front End Mode, the yellow LED turns on solid after the yellow flash. Press the * key to clear.



International Electronics, Inc.

427 Turnpike St.

Canton, MA 02021 U.S.A.

Phone: 800-343-9502, 781-821-5566

Fax: 781-821-5566

Website: www.ieib.com