STAND ALONE KEYPADS

DTX-2100 Series

Single Door Stand Alone Keypad

The DTX-2100 keypad uses hardened backlit keys and the DTX-2110 uses metal Braille alpha-numeric keys to ensure long-term durability and high-quality performance. DTX-2100/2110 keypads are designed for both indoor and outdoor surface/flush mount applications. The DTX-2120 mounts directly to mullion door frames or most flat surfaces with no backbox required. The convenience of the built-in doorbell feature on the DTX-2120 with the sleek design make it an easy choice for entrance installations. The electronics for each keypad are conformal coated in order to provide excellent protection from the elements.



DTX-2100 (Backlit Keypad)



DTX-2110 (Durable Metal Keypad - with braille)



DTX-2120 (Mullion Mount Backlit Keypad)

Benefits

- Affordable single-door security application in new or exisiting structures
- Dependable service and security in most environments
- Multi-user capabilities
- Flexible programming capable
- Easy installation
- Controls unauthorized access/ egress

Features

DTX-2100

- 500 users
- Single gang flush mount design
- Backlit hardened keys
- Polycarbonate trim
- Conformal coating
- Light/Medium Duty
- Key press feedback via sounder and yellow LED
- Built-in assignable sounder
- Bi-color Red/Green LED indicates relay status
- Indoor/outdoor use
- Keypad programmable
- DTX-4000 Hub Manager Compatible
- 3 year warranty
- UL 294 Listed

DTX-2110

- 500 users
- Single gang flush mount design
- Metal braille alpha-numeric keys
- Brushed metal trim
- Conformal coating
- Harsh conditions/Heavy duty
- Key press feedback via sounder and yellow LED
- Built-in assignable sounder
- Bi-color Red/Green LED indicates relay status
- Indoor/outdoor use
- Keypad programmable
- DTX-4000 Hub Manager Compatible
- 3 year warranty
- UL 294 Listed

DTX-2120

- 120 users
- Surface mount - fits on door mullion
- Backlit hardened keys
- Aluminum enclosure
- Conformal coating
- Light/Medium duty
- Door position monitoring
- Door ajar, forced door, alarm shunt outputs
- Sounder
- Indoor/outdoor use
- Door bell relay
- 3 year warranty
- UL 294 Listed

Where Trust is Built™

DETEX®

Life Safety and Security Door Hardware

Features Continued

DTX-2100

- Relay Contact Rating 2A @ 30VAC/DC (Main & Aux.)
- Door Position Inputs
- Request to Exit Input
- Alarm Shunt
- Temperature tolerance: -20F to 130F

DTX-2110

- Relay Contact Rating 2A @ 30VAC/DC (Main & Aux.)
- Door Position Inputs
- Request to Exit Input
- Alarm Shunt
- Temperature tolerance: -20F to 130F

DTX-2120

- 3 - 1 amp SPDT relays in controller
- Door Position Inputs
- Request to Exit Input
- Alarm Shunt
- Temperature tolerance: -20F to 130F

Technical Information

- 10-30 VDC; 12-24 VAC auto-adjusting
- 30 mA
- Power Supply
  90-800
- Transformers - Hard Wired
  Detex P/N - PP-5152-2 (24 VAC)
  PP-5152-3 (12 VAC)
- Transformers - Plug In
  TFMR12 (12VDC)

(Contact Factory for additional Power Supply Options)

- Electric strike or other locking device powered at 12 or 24 VAC up to 2 amps

Riser Diagram

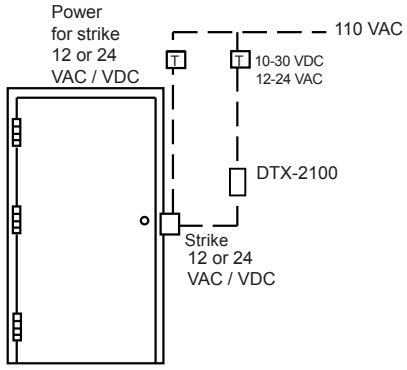

Dimensions

DTX-2100 and DTX-2110

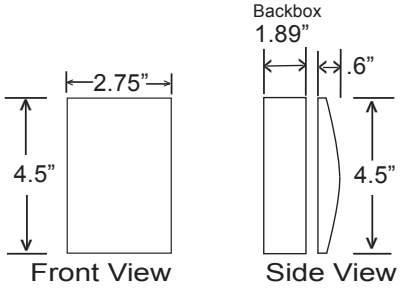

DTX-2120

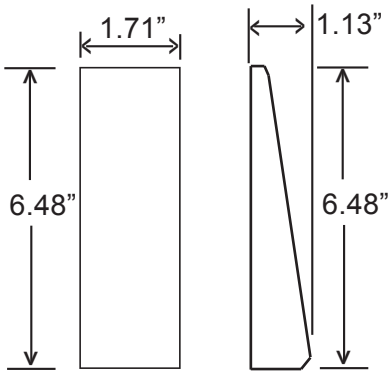

Listings and Approvals

c UL us LISTED

UL 294 Listed

Detex Limited Warranty

3 Year Limited Manufacturer’s Warranty

Where Trust is Built™

DETEX®

Life Safety and Security Door Hardware

Detex Corporation
302 Detex Drive
New Braunfels, Texas 78130-3045 USA
PH. (830) 629-2900
(800) 729-3839
FAX (800) 653-3839
http://www.detex.com
USA Sales:
marketing@detex.com
International Sales:
export@detex.com

September 4, 2015