Assembly Note

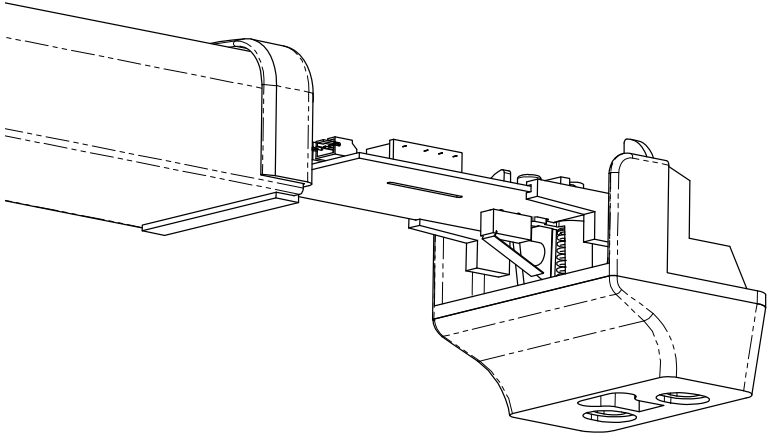

When removing and installing the DSB bar end mount assembly with the PC board from/to the end of the bar, ensure that the lever of the limit switch (under the PC board) does not become dislodged. If the lever is dislodged or comes off, simply reinstall the lever onto the two raised retaining pins of the switch.

© Copyright, 2011, all rights reserved

PN# 500-21410
Rev. B, 08/11