SECURITRON DSB-TDM
DUAL SENSE BAR - THROUGH DOOR MOUNT KIT
INSTALLATION INSTRUCTIONS

1. PRODUCT DESCRIPTION

The DSB-TDM kit has been developed to provide the necessary components to create a very secure through-the-door attachment of the DSB to a solid wood or hollow metal door. Along with these instructions, the kit should include the following items:

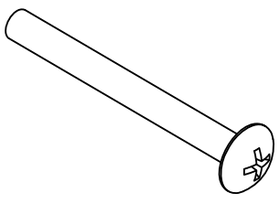	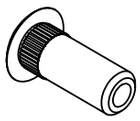
4X 1/4-20 X 2-1/2” Long Phillips Truss Head Screws	4X 1/4-20 Sex Bolts

2. RECOMMENDED TOOLS

Power Drill	Drill Bits: 9/32” [7.0mm] and 3/8” [9.5mm]
Center Punch	Screwdriver: #2 or #3 Phillips

3. INSTALLATION INSTRUCTIONS

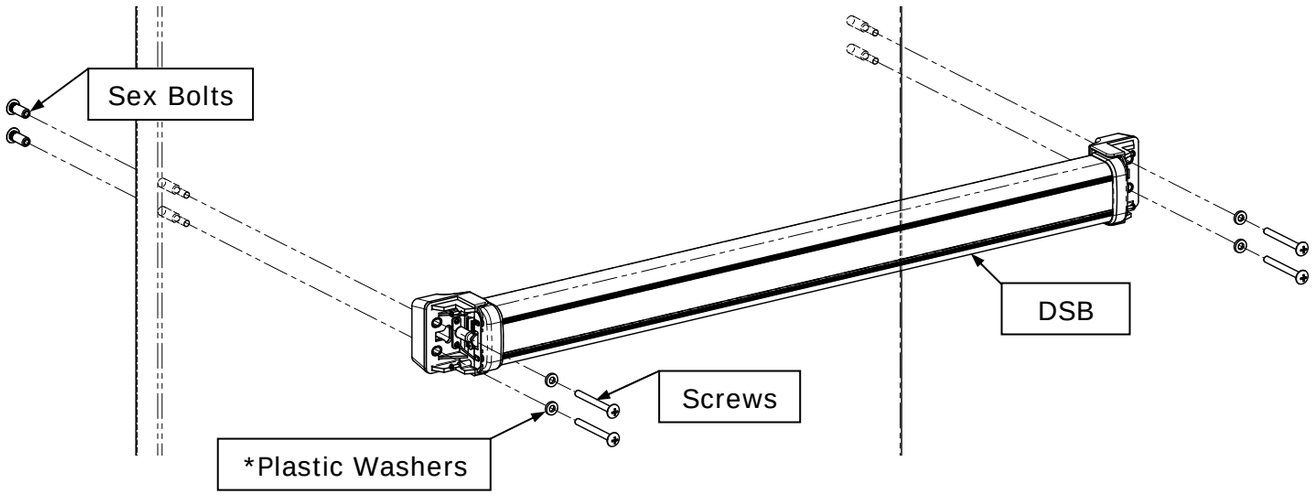

*** The plastic washers shown are provided with the original DSB hardware.**

3.1. BAR POSITIONING AND MOUNTING HOLE MARKING

All marking and door preparation should be done using the DSB Series product installation and operation instruction manual.

© Copyright, 2011, all rights reserved

3.2. BOLT THROUGH DOOR PREPARATION:

Figure 1 illustrates a section view of the through door mount (on a solid wood door). This configuration may be used on solid wood doors, hollow or solid metal doors, or chalk filled *fire doors.

***Note: The Dual Sense Bar may not be used on a fire rated door that requires a fire rated latch! The DSB has no latch. Occasionally however, fire doors are permitted on openings where a fire rated barrier is not required. Use of the DSB should always be verified and approved through local building code and/or fire prevention agencies.**

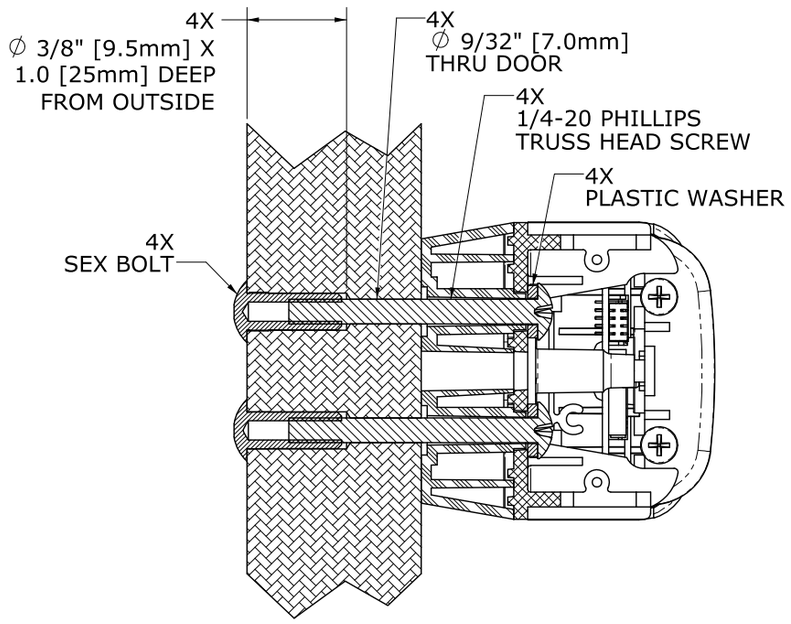

STANDARD THROUGH DOOR MOUNT

Figure 1

Note: Ensure that the four (4) plastic washers provided with the DSB unit are used inside the end mount assemblies at each end of the bar. The DSB touch sense will not function correctly without these (non-conductive) plastic washers.