Detex Corporation, 302 Detex Drive, New Braunfels, Texas 78130-3045
830-629-2900 / 800-729-3839 / Fax 800-653-3839 / Text photos only: 830-481-6433 / INTERNET: www.detex.com

INSTALLATION INSTRUCTIONS FOR THE ECL-230D/230D-PH EXIT CONTROL LOCK

Drawing: 0962 / 3548

Table of Contents Page

Device parts breakdown view..... 2
Parts list..... 3
Hardware List with part numbers & tools required..... 4
Application examples..... 4
Door and Frame prep, Install backplate and strike..... 5
OKC and IKC installations., securing the cylinder..... 5
Install cam bridge, pushbar, battery, cover and sign..... 6
Testing ad troubleshooting..... 7
(blank page)..... 8
Surface keeper template..... 9
Semi mortise keeper template..... 10

Should you have a Question/Problem with your Detex device please call Detex Technical Support from the job site at 1-800-729-3839 and choose option 2 on our menu. Please do not return the product to the distributor.

For WARRANTY information, scan code below or go to www.detex.com/warranty

For device installation videos, scan code below or go to www.detex.com/videos

Owner's Copy

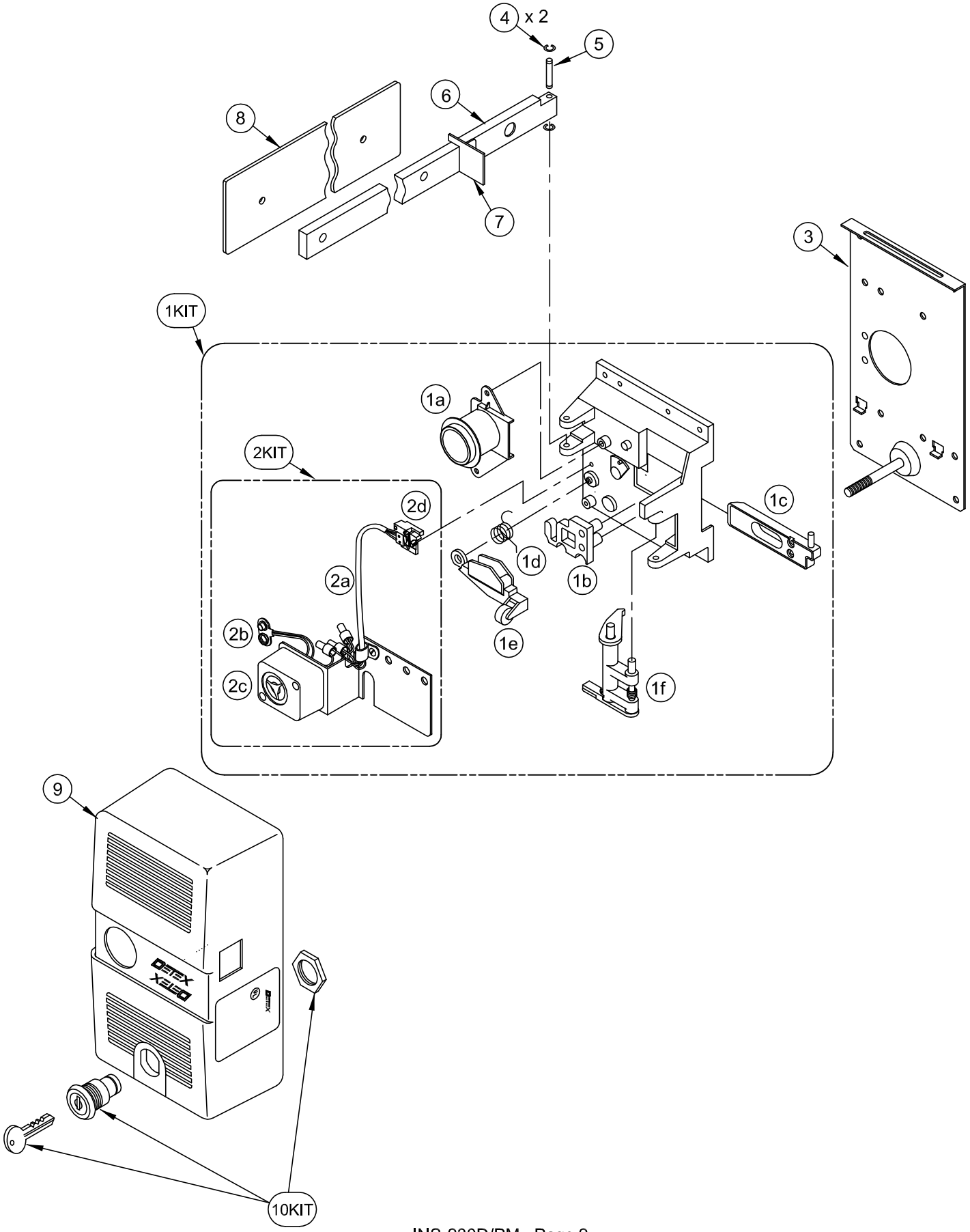
4 x 2
5
6
8
7
3
1KIT
1a
2KIT
2d
1c
1d
2a
1b
2b
1e
2c
1f
9
DETEX
X230
10KIT

PARTS BREAKDOWN		
Item	**Order Part #**	**Description**
1KIT	ECL-243PH	Mechanism Assembly (includes 1a-1f & 2kit)
1a	ECL-1576-15	Cam Bridge Assembly
1b	ECL-285A	Cam Plate Bottom
1c	ECL-306-1	Bolt Assembly
1d	ECL-284	Detent Spring
1e	ECL-293A	Detent Lever & Roller Assembly
1f	ECL-1576-20	Actuator & Release Lever Kit
2KIT	100069-1	Siren Switch Assembly (includes 2a-2d)
2a	ECL-204-1	Switch Assembly
2b	100331	9V Battery Connector
2c	PP-5966-1	Siren
2d	101796	Holder-Switch Actuator Replacement kit
3	ECL-354AR	Backplate
4	PP-5090-1	Retaining Ring
5	ECL-236	Bar Pin
6	ECL-332	Paddle Bar, Short
	ECL-2105	Paddle Bar, Long
7	ECL-419	Bar Shield
8	ECL-8220	Paddle Bar Plate, Short (2 hole)
	ECL-2109	Paddle Bar Plate, Long (3 hole)
9	ECL-355	Cover
10KIT	PP-5572	Lockset with 2 Keys (includes 10a) (select key number 11 thru 20)
10a	ECL-405	Key (select key number 11 thru 20)

Your particular part or configuration
may not be shown:
Contact Detex technical support
at 800-729-3839 (option 2)

Device Keeper / Hardware kit:	
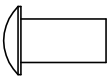	P/N: ECL-269 Sleeve Nut
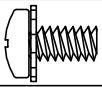	P/N: 106754-106 10-32 x 3/8" SEMS PPH
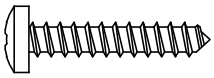	P/N: PP-5183-68 #10 x 1" PPH
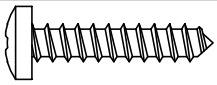	P/N: PP-5183-88 #12 x 1" PPH
	P/N: PP-5066-12 #12 Internal tooth lockwasher
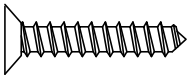	P/N: PP-5212-68 #10 x 1" PFH
	P/N: PP-5305-110 10-24 x 5/8" PFH
	P/N: PP-5090-1 Retaining ring
	P/N: ECL-247 Bar Spring
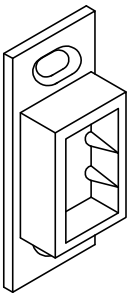	P/N: ECL-437 Surface Keeper
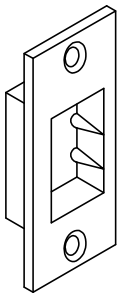	P/N: ECL-439 Semi-mortise Keeper
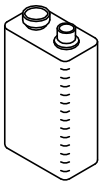	P/N: PP-5567 9V Battery

TOOLS REQUIRED:
Pencil
Tape for templates
Center punch
Hammer
Drill motor
Drill bits
Screwdrivers
Linesman's cutters
Tape measure
Combination square
10-24 Tap

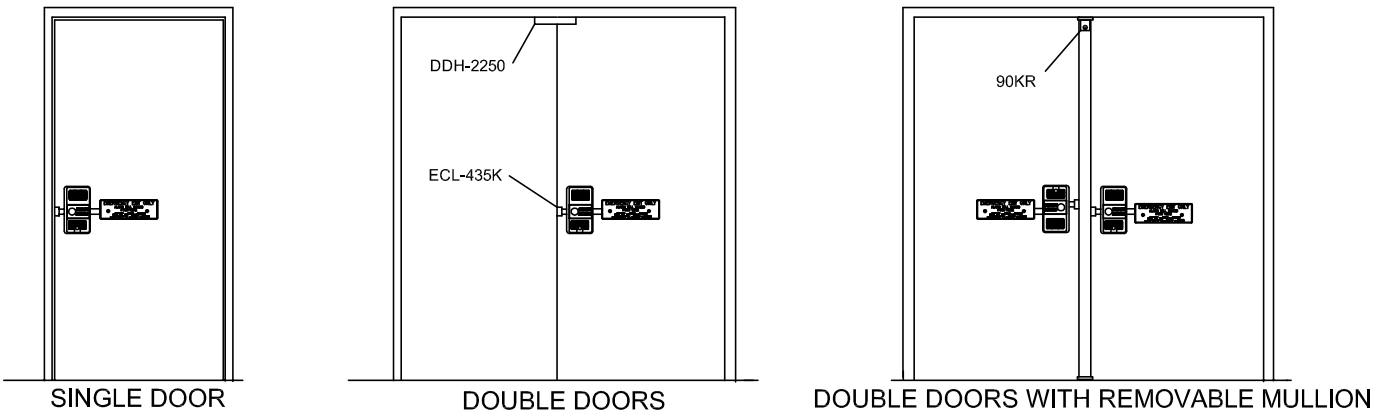

FIG. 1 - APPLICATIONS, ECL-230D

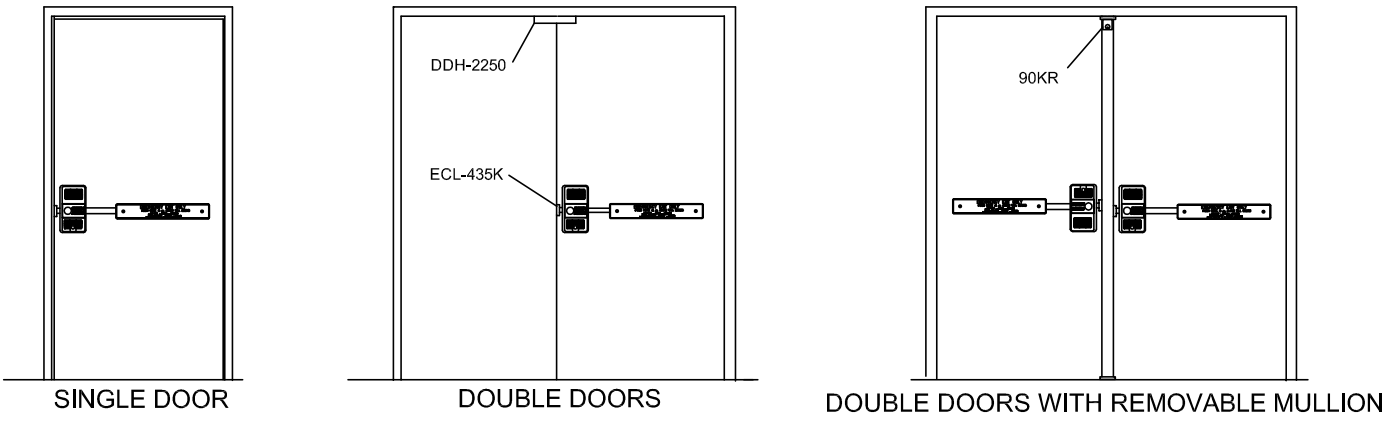

FIG. 2 - APPLICATIONS, ECL-230D-PH

DOOR AND FRAME PREPARATION

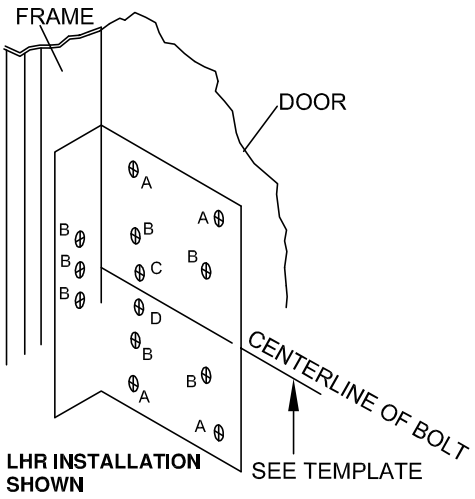

Select the proper template. One is provided for surface keeper & one for semi-mortise keeper. Fold template along dashed line marked 'FOLD UP 90°'.

Draw a line on the door for centerline of bolt. Height of this line from finished floor as shown on the template is 42-5/8" for LHR & 43-3/8" for RHR.
Butt the door firmly against the door stop. Position the template on the door.

Mark the 4 holes marked 'A' and the 4 holes marked 'B' on the door.
Mark the 'B' holes on the frame: 2 holes for semi-mortise keeper or 3 holes for surface keeper.

If the okc is to be installed, mark the OKC hole center, at 'C' for LHR or 'D' for RHR.
Bore a hole through the door for the OKC rim cylinder. (1-1/4" dia for the Detex cylinder).

Drill door holes marked 'A' (#18 drill) for #12 screws.
Drill door holes marked 'B' (#25 drill) for #10 screws.
Drill frame holes marked 'B' for #10 screws.
Install the keeper with #10 screws.
TO REMOVE COVER FROM DEVICE, TURN COVER LOCK KEY COUNTERCLOCKWISE (CCW) UNTIL COVER RELEASES.

INSTALL BACKPLATE & KEEPER

(SURFACE KEEPER SHOWN)
Install the KEEPER with #10 screws

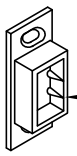

NOTE: Keepers are installed with 'ribs' toward door

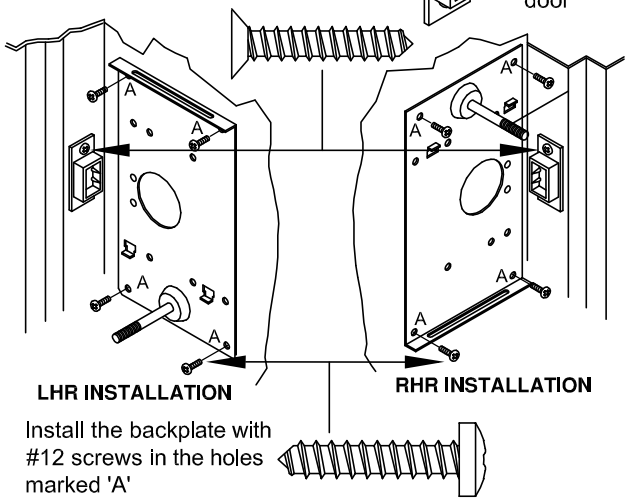

Install the backplate with #12 screws in the holes marked 'A'

FIG. A- OUTSIDE KEY CONTROL (OKC) INSTALLATION

If the okc is to be installed, do so as shown below.
Follow label instructions on rear of mechanism.
*Lockwashers are supplied with Detex cylinders.

NOTE: REMOVE KEY FROM CYLINDER

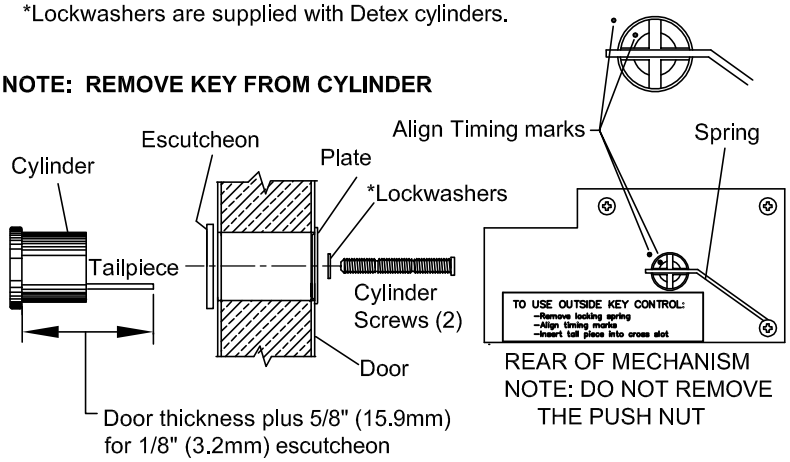

FIG. B- INSIDE KEY CONTROL (IKC) INSTALLATION CYLINDER / TAILPIECE PREPARATION

NOTE: The cam bridge is designed for both a 5 pin and a 7 pin rim cylinder.

VERIFYING TAILPIECE LENGTH:

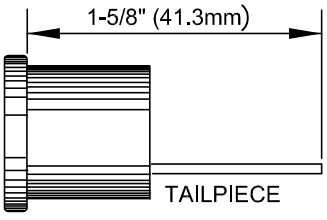

CUT TAILPIECE AS REQUIRED TO OBTAIN ABOVE DIMENSIONS

SECURING THE CYLINDER:

① Remove cam bridge:

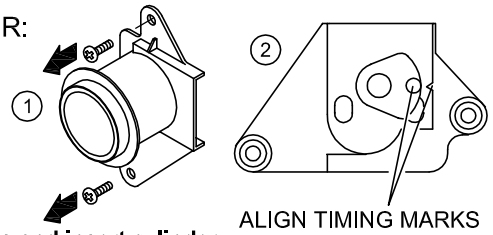

② Secure cylinder:
Remove key, align timing marks and insert cylinder.
Install 1 screw and lockwasher in the exposed hole.
Insert the key and turn it to expose the second hole.
Install the second screw and lockwasher.
Turn the key in both directions.
There must not be any friction or binding.

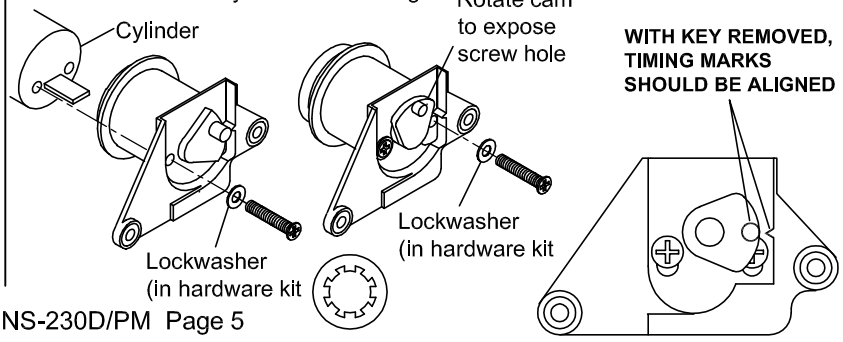

INSTALL MECHANICAL ASSEMBLY

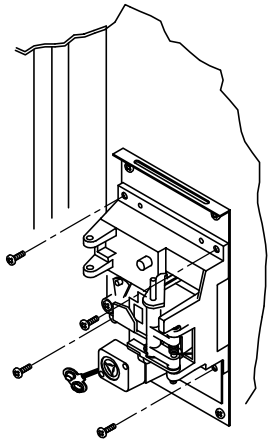

INSTALL CAM BRIDGE

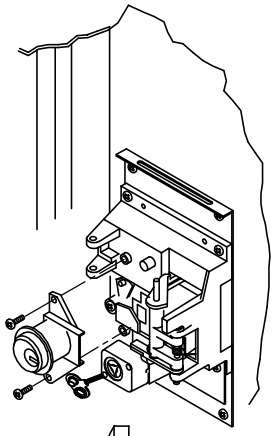

INSTALL CAM BRIDGE ASSEMBLY:

NOTE: When re-installing cam bridge assembly, remove key from cylinder and make sure both micro-switches are properly seated on plastic base (ECL-308).
Secure cam bridge.
Insert key in IKC cylinder and cycle switches by turning key clockwise/counter-clockwise 2 to 3 times.

Install the mechanical assembly with 4 #10 screws in the 'B' holes.



#10 x 1" PPH

INSTALL PUSHBAR

Remove one of the retaining rings from the bar assembly and pull the bar pin out.
Align the bar hole with the holes in the mechanical assembly and insert the bar pin. Push the retaining ring into the groove at the bottom end of the installed pin. Note the position of the plastic guard.

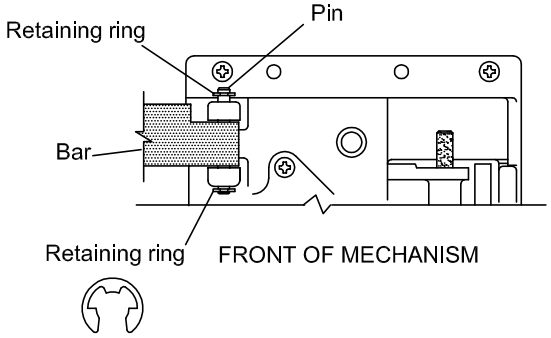

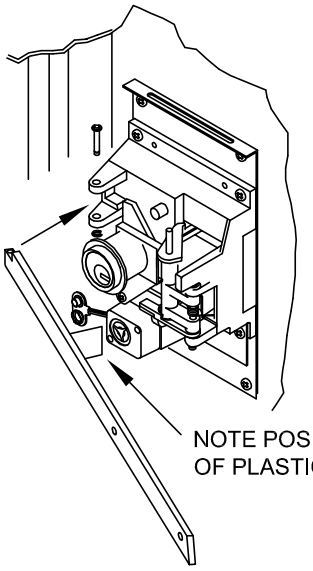

INSTALL 9V BATTERY

Snap the 9V battery onto the battery connector and install the battery into the battery clip located behind the siren.

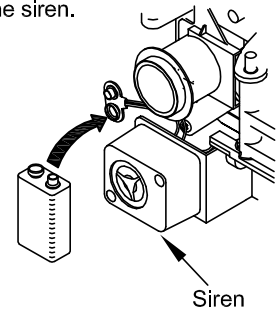

INSTALL COVER & SIGN

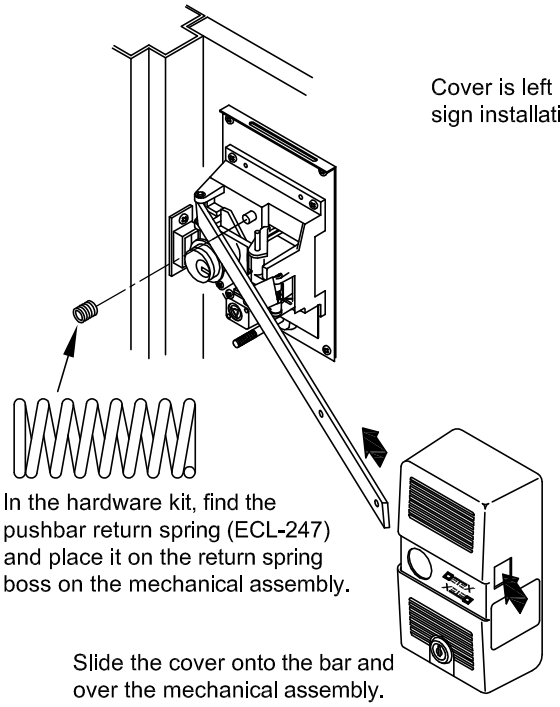

In the hardware kit, find the pushbar return spring (ECL-247) and place it on the return spring boss on the mechanical assembly.

Slide the cover onto the bar and over the mechanical assembly.
It will be necessary to swing the bar out to properly position the cover.

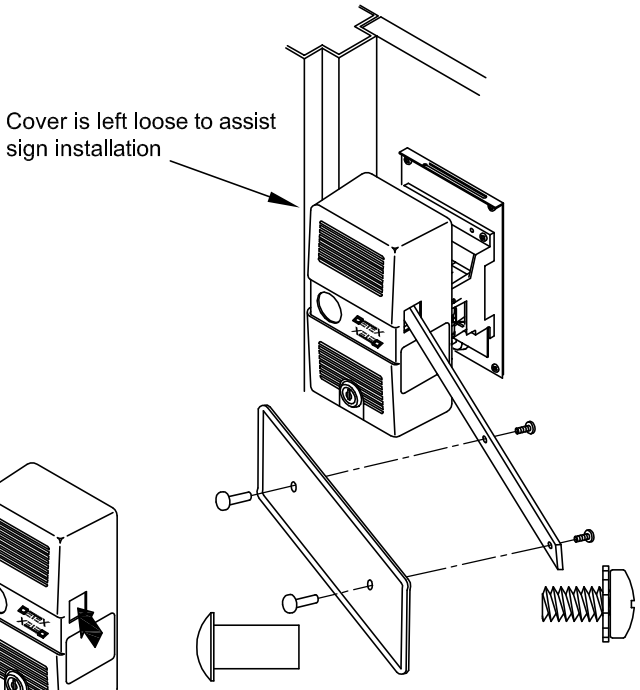

Ensure that sign text is right side up and facing away from door

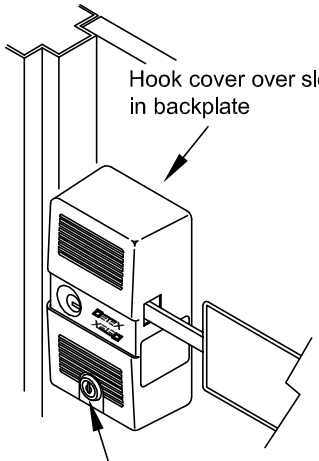

Tighten the mounting cylinder by rotating clockwise (cw) with supplied key until cover is secure

TESTING:

Lock operatIon and condItIon of battery (or battery eliminator):

1. With the door closed, rotate the I.K.C. key clockwise a full 360 degree (from the key out position) to extend the bolt into the keeper (the locked position). Remove the I.K.C. key. Next push the paddle bar. The alarm should sound and the bolt should retract to unlock the door.
2. Open the door.
3. Close the door, rotate the IKC key clockwise a full 360°. The bolt extends and the unit stops sounding.

OKC operatIon (If used):

Using OKC key, extend/retract bolt.
Unit should not sound and door should be free to open.

VISUAL INSPECTION (Twice a year)

1. Inspect door and door frame. Make sure door opens easily and does not bind against the frame or threshold. Check for door sag and warping. Also check conditions of hinges and lubricate as needed.

2. Remove lock cover. Check for dirt accumulation, battery leakage, and for smooth operation of bar, bolt and cylinder. Lubricate moving parts as required with lithium spray. (See Lubrication Diagram).
   Important Note: When extended, the bolt must never bind against the inside of the keeper. Should the bolt bind, reposition the keeper so that the bolt withdraws without restriction.
3. **Repeat Operation Test** (above) several times to insure proper functioning.

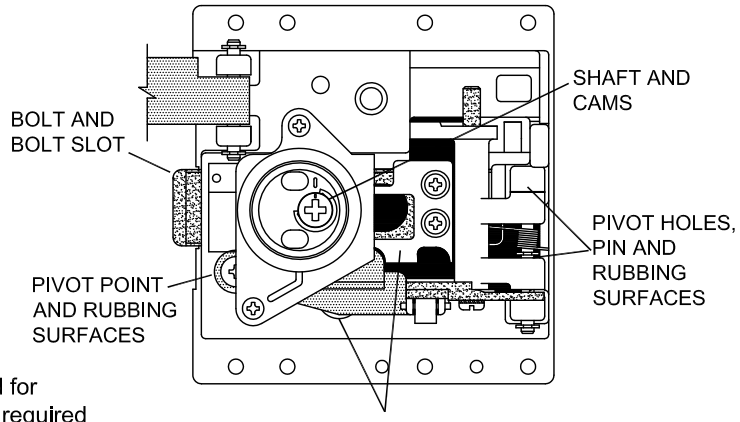

Lubrication Diagram

TROUBLESHOOTING

1. Siren does not sound when the paddle bar is pushed:
   A) Remove the cover by inserting the cover key and turning it counter-clockwise until cover releases
   B) Disengage the cover from the back plate and swing it out of the way.
   C) Confirm the battery is good visually and the voltage is a minimum of 7 volts. If OK continue. If not replace the battery and check for broken wires and retest. If unit is still not sounding call DETEX Customer Service in USA at 800-729-3839.

2. Key control cylinder (IKC) (Fig B on page 5)- Hard to turn (Binding):
   A) Make sure the cover key is available.
   B) Push on the paddle bar to open the door - with the door open, reset alarm.
   C) Keeping the door open, use the key to turn the *control cylinder (IKC)* key clockwise and counter-clockwise. Bolt should extend and retract freely.
   D) If the bolt and key worked freely, the problem is alignment between the bolt and the keeper.
   E) If step "2B" does not conform, remove the cover (see step 1A & 1B).
   F) Remove the *Cam bridge Assembly*. With the key removed, confirm the timing markings are aligned.
   G) If the timing marks do not line up then reinstall the cylinder (per instructions).
   H) If the cylinder turns hard, the tail piece is too long and needs to be cut as shown. Detex 5 pin cylinder (ECL-445) is shown. For 6-7 pin rim cylinder use ECL-1595-1 escutcheon and cut tailpiece accordingly.
   I) Insert the key in the cylinder and turn it clockwise/counter-clockwise. The cam and the key should turn freely. If the key turns, but not the cam, the *cylinder tail piece* was cut too short and has slipped out of the cam. Replace the tailpiece or the cylinder.

3. The bolt does not retract/extend using the outside key control (OKC) (Fig A on page 5):
   A) Remove the unit from the door.
   B) From the rear side of the casting, confirm the retaining spring was removed.
   C) Confirm the OKC shaft/cam is not broken and the push nut is in place.
   D) Confirm the tailpiece length is 5/8" beyond the door or beyond the reinforcing plate.
   E) Confirm the timing mark alignment.
   F) While the unit is off the door, check the OKC operations. Using a screw driver, turn the cam clockwise/counter-clockwise.
   G) Retract the bolt, align the timing marks, remove cylinder key, re-install the lock body (make sure the timing mark does not move when reinstalling the lock body). Be sure the cylinder tailpiece is engaging the cross slot on the cam.

4. Siren continues to sound after resetting the alarm (Bolt extended):
   A) Retract the bolt
   B) Remove the cover (see step 1A & 1B).
   C) Disconnect the battery
   D) Remove the Cam Bridge Assembly screws and the Cam Bridge Assembly and inspect the switch levers. Make sure switch levers are not damaged or missing.
   E) If siren still continues to sound after resetting the alarm call Detex Customer Service Department at 800-729-3839.

(this page intentionally left blank)

NOTE: DIMENSIONS MAY NOT BE ACCURATE WHEN PRINTING FROM WEBSITE
PLEASE CONFIRM DIMENSIONS WITH RULER BEFORE USE

TEMPLATE A TPL-230D-1

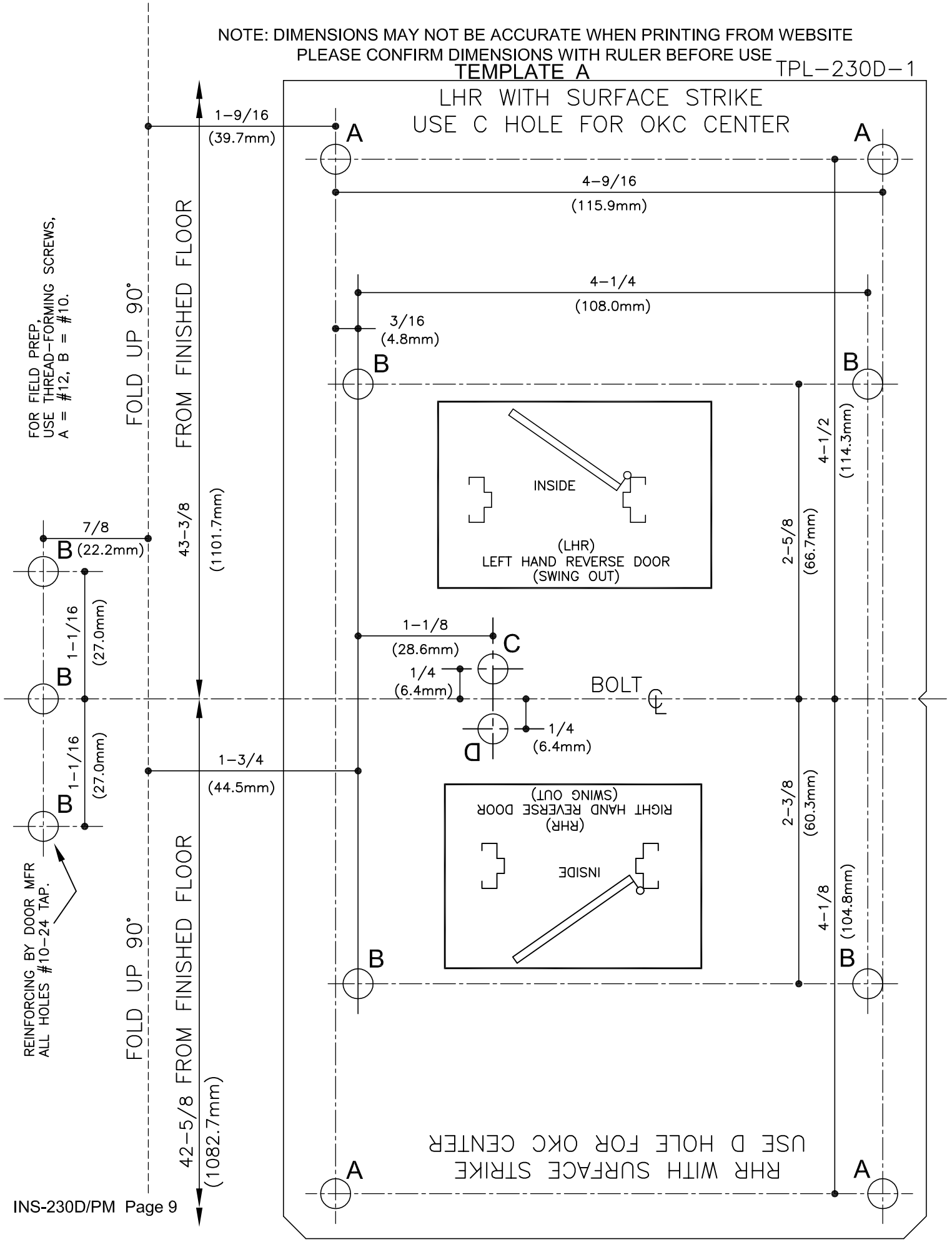

NOTE: DIMENSIONS MAY NOT BE ACCURATE WHEN PRINTING FROM WEBSITE
PLEASE CONFIRM DIMENSIONS WITH RULER BEFORE USE

TEMPLATE B

TPL-230D-2

