INSTALLATION

DE8310

Delayed Egress Electromagnetic Locks

RUTHERFORD CONTROLS
A DORMA Group Company

In or Out... we make it Easy!®

PLEASE DELIVER ALL INSTALLATION INSTRUCTIONS TO THE END-USER UPON COMPLETION OF THE INSTALLATION.

Pre-Installation Instructions

1. This product must be installed according to all applicable building and life safety codes. All installations must be approved by the Authority Having Jurisdiction (AHJ).
2. Due to the variety of mounting configurations available with this product, a survey and assessment of the physical area in which the product will be installed must be performed.
3. The door frame must be inspected and deemed structurally sound prior to installation of the electromagnetic lock. The structural integrity of the mounting surfaces must be strong enough to meet or exceed the holding force of the product.
4. The product must be protected from potential damage due to intruders or tampering.
5. The product should be installed in a location that will not hinder or create a potential safety hazard to authorized personnel accessing the protected area.
6. Because electromagnetic locks are used in a variety of applications and different door frame configurations, an experienced installer with knowledge of this product must make a determination of the optimal mounting method for this specific application.
7. The components, hardware, installation instructions and mounting template included with this product are intended for use on outswinging doors.
8. Do not install this product on the exterior of buildings.
9. Do not use as a doorstop. This will void warranty.
10. Separate accessories not included with this product must be used in the following applications:
    - Narrow head jamb situations or center-hung doors
    - Wherever there is insufficient space on the door frame header to mount the lock
    - Hollow metal or wood frames where the door stop is not thick enough to allow the product to be installed
    - Wherever an obstruction in the door prevents installation of the armature plate at a proper height
    - Doors that do not permit the armature plate to be mounted low enough to meet the magnet surface

    Refer to the Product Accessories Guide section of the Installation Instructions for further information. Accessories may impact holding force.
11. Installation of this product should be done by an experienced installer with knowledge of this product.
12. A mechanical latching device is required in conjunction with the Delayed Egress 8310.

NOTE: It is highly recommended that thread locking compound be applied to all screws during installation to reduce chance of screws loosening over extended time.

Installation Instructions

1. Mount the electromagnetic lock to the door frame as outlined on the installation template included with the product.

Armature Plate Mounting Notes:
1) It is essential that this plate pivot slightly on the mounting bolt to allow proper alignment with the magnet surface. If not aligned, the lock may lose holding force or not lock at all.
2) The rubber washer on the head of the mounting bolt should project slightly beyond the surface of the armature plate. It will expand when power is removed and break the air vacuum between the plate and magnet. If removed or trimmed, the lock will appear to have some holding force even when power is removed.

For added safety, thread locking compound has been provided for the armature plate bolt and the four captive electromagnetic lock mounting screws.

WARNING: Improper installation, maintenance, inspection or usage of the product or any related accessories or parts may cause the electromagnetic lock, armature plate and associated hardware to disengage and fall, causing serious bodily injury and property damage. Rutherford Controls Int'l Inc. and/or Rutherford Controls Int'l Corp. will not be liable to the installer, purchaser, end user or anyone else for damage or injury to person or property due to improper installation, care, storage, handling, maintenance, inspection, abuse, misuse or act of God or nature involving this product or any related accessories or parts.

2. Route the power supply connecting wire through the door frame and into the wire access hole in the top of the magnet housing. Connecting wire should be of sufficient gauge for the lock being installed and the distance being run. See table for current draw specifications and wiring gauge chart.
3. See system overview and switching options.

© 2016 RUTHERFORD CONTROLS INT'L | A DORMA GROUP COMPANY
WWW.RUTHERFORDCONTROLS.COM • PHONE: 1.800.265.6630 • FAX: 1.800.482.9795 • E-MAIL: SALES@RUTHERFORDCONTROLS.COM

Delayed Egress System – Overview

The Delayed Egress electromagnetic lock is a fail safe device.

In the normal condition with power, the door is locked, the local buzzer is off, the local SPDT relay is de-energized and the remote alarm DPDT relay is energized.

The exit sequence starts with a slight push to the door. A nuisance delay period can be set for 0, 1, 2 or 3 seconds as defined by the local building code. During this period the local buzzer will pulse and the local alarm relay will be energized. If pressure on the door is withdrawn during this period the system returns to normal conditions. This would be considered accidental triggering.

If pressure is maintained for longer than the set nuisance delay, an irreversable release delay sequence begins. This release delay is for 15 seconds, but may be extended to 30 seconds with permission of the Authority Having Jurisdiction (AHJ). It includes the short nuisance delay. Pressure is no longer required on the door. The remote relay de-energizes. The local buzzer changes from a pulse to steady.

The lock releases when the release delay time ends. The local buzzer remains on until reset and the local alarm relay will de-energize. The system relock is defined by the local building code.

All installations must be approved by the local Authority Having Jurisdiction (AHJ).

Anti-Tamper Feature - Two screws prevent insertion of an Allen wrench into the captive mounting screw opening on the bottom of the lock. Fig. 1 shows their location. One screw also secures the wiring cavity cover. The mounting plate cannot be separated from the lock without removing these two screws.

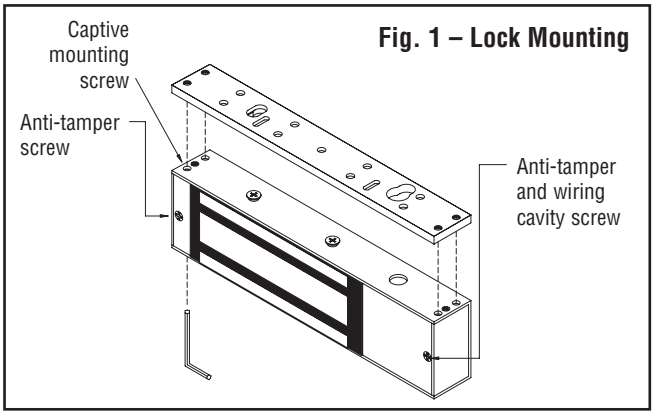

Fig. 1 – Lock Mounting

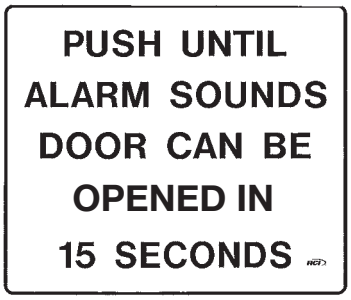

Several building codes including the NFPA 101 Life Safety Code and the International Building Code require the signage (shown left) to be mounted on the door close to the releasing device.

Delayed Egress System – Status Indicators

System Status	Light Panel	Local Buzzer*	Local Alarm Relay	Remote Alarm Relay
Door Open	Red on	OFF	OFF	OFF
Locked	Green blinks every 5 seconds	OFF	OFF	ON
Nuisance Delay Period	Red blinking (fast)	Pulsing Sound	ON	ON
Release Delay Period	Red blinking (slowly)	Steady Sound	ON	OFF
Lock Release	Red/Green blinking alternately	Steady Sound Until Reset	OFF	OFF
Forced Open	Red blinking (fast)**	Pulsing Sound**	ON	OFF
Exit Switch to Open (Authorized Exit)	Red On	OFF	OFF	OFF

* The DE8310S model has an internal buzzer.
The base unit ships with an external sounder.
(see page 4 & 5)

** If forced open before the set release delay has lapsed, the sounder indicator can only be turned off by switching the system power off.

Specifications

This product has been successfully tested and evaluated by UL in two separate categories for use in both the United States and Canada.

Auxiliary Lock. The GWXT fire listing qualifies the DE8310 series for use with UL Classified fire doors maximum 4' in width and 8' in height, rated up to and including 1-1/2 hr.

Special Locking Arrangement Component. Additionally, these products are qualified components for the purpose of locking outward-swinging exit doors against unauthorized egress.They are designed to release automatically in case of a power failure or upon activation of an automatic fire alarm system wired to the power supply fire panel relay.

The Following Conditions of Acceptability Apply:
1) This product is intended for use with Special Locking Arrangements which are installed in accordance with the manufacturer's installation and operation instructions, the Life Safety Code, NFPA 101 of the National Fire Protection Association and the local authority having jurisdiction.
2) The power for this unit is to be provided by a Listed (ALVY, FULA7, FUPPC, UEHX7, APHV or APHV7) Class 2 power supply when designated as a Special Locking Arrangement (FWAX).
3) The suitability of the lead wires is to be evaluated per the requirements for the end-use product.
4) When this component is used in a system designated as a Special Locking Arrangement (FWAX), it is to be evaluated as part of the overall system with respect to the requirements in the Life Safety Code, NFPA 101 for the end-use product.

The Delayed Egress electromagnetic locks are not intended or tested for use as a UL Listed Burglar Alarm System unit.

PATENTS: US 8,292,337 and Canada 2,632,243

MECHANICAL Including 1/4" (6.4mm) mounting bracket**:**
Base Unit DE8310 Lock Dimensions:
2-1/8"D x 2-7/8"H x 10-13/16"L (54mm x 73mm x 275mm)
Sound:
2-1/8"D x 2-7/8"H x 11-3/4"L (54mm x 73mm x 299mm)

DE8310 Armature Plate Dimensions:
5/8"D x 2-3/8"H x 7-7/16"L (16mm x 61mm x 190mm)

ELECTRICAL:
Voltage: Auto Sensing 12VDC to 24VDC
Power Consumption:
With Integral Sound 12VDC - Max 0.66A / 24VDC - Max 0.33A
Base Unit* 12VDC - Max 0.61A / 24VDC - Max 0.32A

* Ratings shown include the external sounder required by NFPA101

Local Alarm Output: SPDT Relay: 1.0A 120VAC, 2A 30VDC inductive load
Remote Alarm Output: DPDT Relay: 1.0A 120VAC, 2A 30VDC inductive load

ENVIRONMENTAL:
Not for use in outdoor environments.
Circuit board operating temperature: 14 to 140˚F (-10 to 60˚C)

NOTE: The DE8300 series electromagnetic locks must be powered with a filtered and regulated DC power supply listed to UL294, UL603, CSA-C22.2, ULC-S318 or ULC-S533 and rated 12 to 24V.
RCI recommends the 10 Series Power Supplies and full line of switching devices for use with the Delayed Egress Series Locks

The magnet warranty is 5 years.
The sound module warranty is 1 year.

Specifications subject to change without notice.

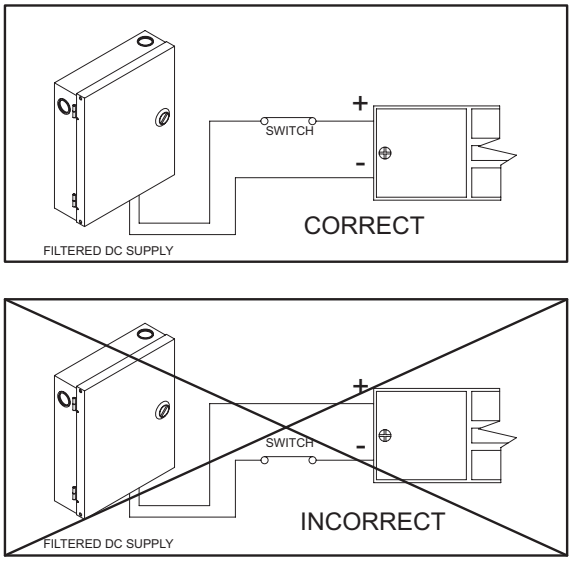

Fig. 2 – Power Connections

To Ensure Instant Release All switching devices must be wired in between the DC power source and the positive terminal of the lock as illustrated in Fig 2.

Switching the negative power supply line will not allow the lock to release immediately. RCI electromagnetic locks contain MOV's for surge suppression and do not require any additional suppression to be added during installation. The installation of diodes across the lock input terminals will cause a delay in release.

DE8310 Delayed Egress Electromagnetic Lock
Installation Instructions (Continued)

Building Codes

The DE8310 Series supports the requirements of numerous building codes. These recaps represent our best understanding at the time of print. As codes may change, they should be referenced directly. DE8310 series locks have been factory set to International Building Code 2012 requirements. **It is the responsibility of the installer to ensure that SW1 Dip Switch settings comply with local Fire, Building and Life Safety Codes. All installations must be approved by the local Authority Having Jurisdiction (AHJ)**.

1. INTERNATIONAL BUILDING CODE (2009 and 2012)

NUISANCE DELAY: set at 1 sec RELEASE DELAY: 15 sec.*
RELOCK: To be done manually by a key switch and must be located at the door, **a door switch cannot be used for relocking**. Please connect a momentary spring loaded NORMALLY OPEN key switch to system Reset Switch Input (RST).

2. STANDARD BUILDING CODE (1999)

NUISANCE DELAY: Not allowed. RELEASE DELAY: 15 sec.*
RELOCK: Actuates after door OPENS and CLOSES, using a door switch rather than a key switch. Please connect a NORMALLY OPEN door switch (by others) to system Reset Switch Input (RST).

3. NFPA 101 (2009 and 2012)

NUISANCE DELAY: Permitted up to 3 sec. RELEASE DELAY: 15 sec.*
RELOCK: To be done manually by a key switch, **a door switch cannot be used for relock**. Please connect a momentary spring loaded NORMALLY OPEN key switch to system Reset Switch Input (RST).

4. UNIFORM BUILDING CODE (1997)

NUISANCE DELAY: Set at 2 sec. RELEASE DELAY: Set at 15 sec.
RELOCK: To be done manually by a key switch and must be located at the door, **a door switch cannot be used for relocking**. Please connect a momentary spring loaded NORMALLY OPEN key switch to system Reset Switch Input (RST).

The Uniform Building Code is unique, in that it extends the requirement for "manual relock at the door" to include all power interruptions.

5. BOCA (1999)

NUISANCE DELAY: Set at 1 sec. RELEASE DELAY: 15 sec.*
RELOCK: Set Dip Switch 4 to OFF to activate the relocking system. After the door unlocks and opens the normally closed door switch changes state and remains open. When the door closes, a delay of 30 seconds begins. If the door remains closed, it will relock. Reopening the door restarts the 30 second delay. Please connect a NORMALLY OPEN door switch (by others) to system Reset Switch Input (RST).

The door must be open and closed to relock.

6. NATIONAL BUILDING CODE OF CANADA (2005)

NUISANCE DELAY: Not allowed. RELEASE DELAY: Set at 15 sec.
RELOCK: To be done manually by a key switch, **a door switch cannot be used for relock**. Please connect a momentary spring loaded NORMALLY OPEN key switch to system Reset Switch Input (RST).

* Release delay may be extended to 30 seconds with the approval of AHJ

Circuit Board Connections

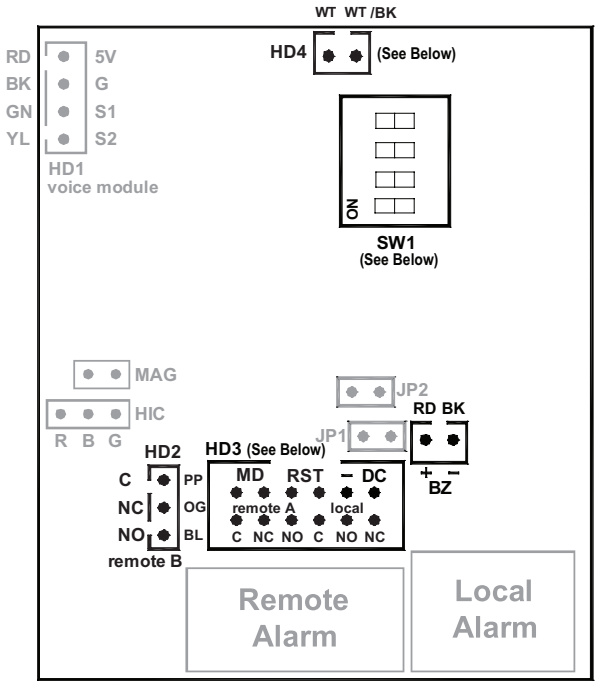

HD4: A N/O momentary local override switch must be installed in the same room as the electromagnetic lock (7 second release)
BZ: 9VDC output to Buzzer max 100mA
HD2: Same as Remote A below

HD3 Main Harness

RST: Connect the brown and brown/white leads to reset switch or door switch per local code
- DC: DC power wires; black is negative (-) and Red is positive (+)
Remote A Purple is common (C)
Orange is normally closed (NC)
Blue is normally open (NO)
(See listing details on page 3)
Local: Grey is common (C)
Green is normally open (NO)
Pink is normally closed (NC)

SW1 Dip Switch Settings

Nuisance Delay Dip Switch 2&3

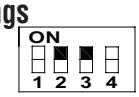

0 Sec.

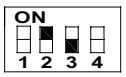

1 Sec.
Factory Setting

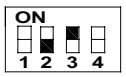

2 Sec.

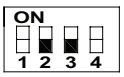

3 Sec.

Release Delay Dip Switch 1

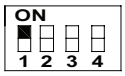

15 Sec.
Factory Setting

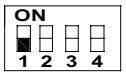

30 Sec.

BOCA Relock Dip Switch 4

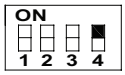

Non BOCA
Factory Setting

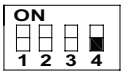

BOCA

Wiring Diagram

Diagram reflects status with power on and door opened.
A mechanical latching device is required in conjunction with the Delayed Egress 8310

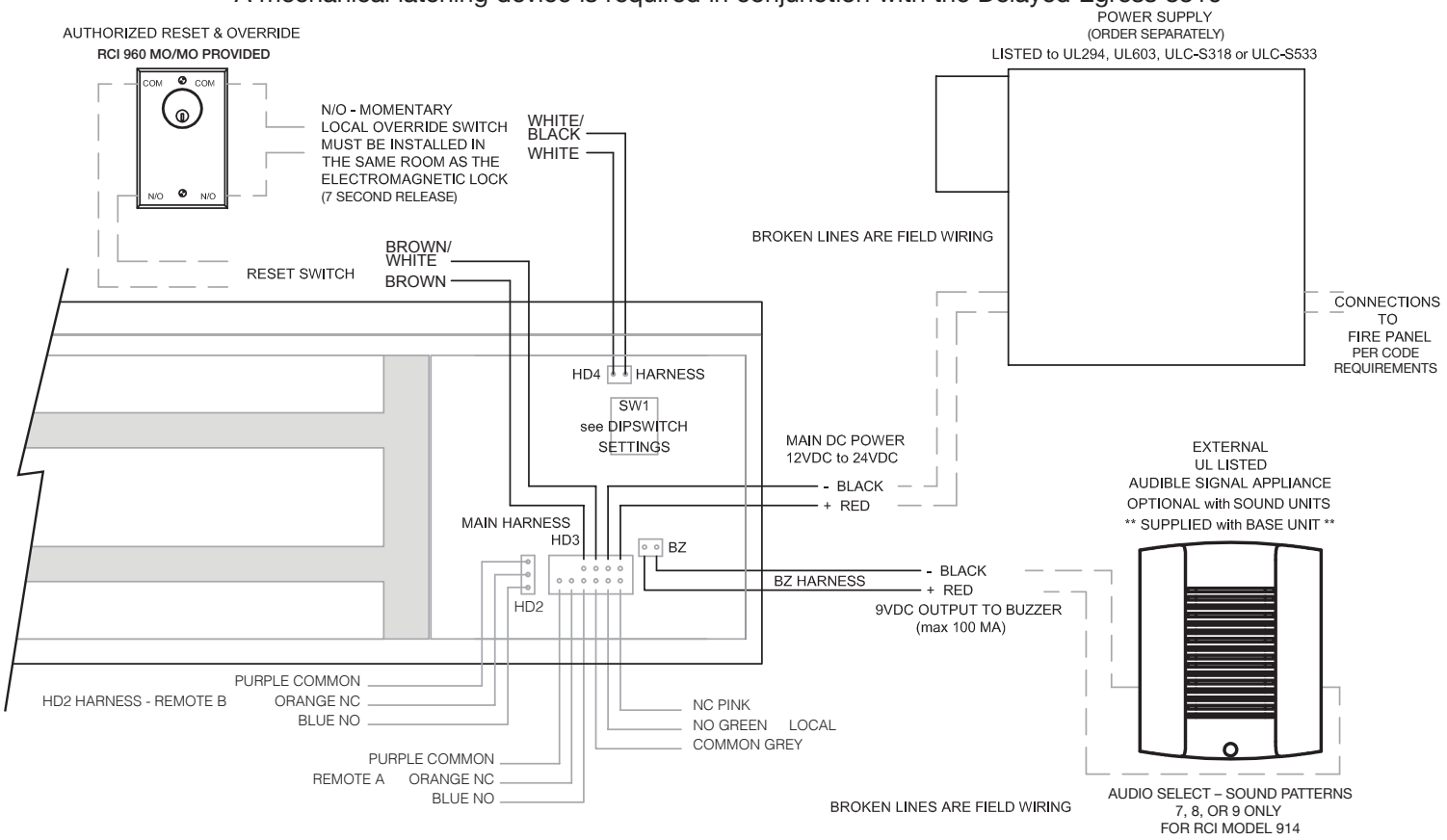

NOTE: By using either remote relay and the local relay, you can have the alarm sound after the nuisance delay for 30 seconds or if the door is forced open. Alarm will not sound in any other condition.

REMOTE **LOCAL**

→ C → N/C → C → N/O →

Reset and Override Wiring for BOCA Requirements

Diagram reflects status with power on and door opened.

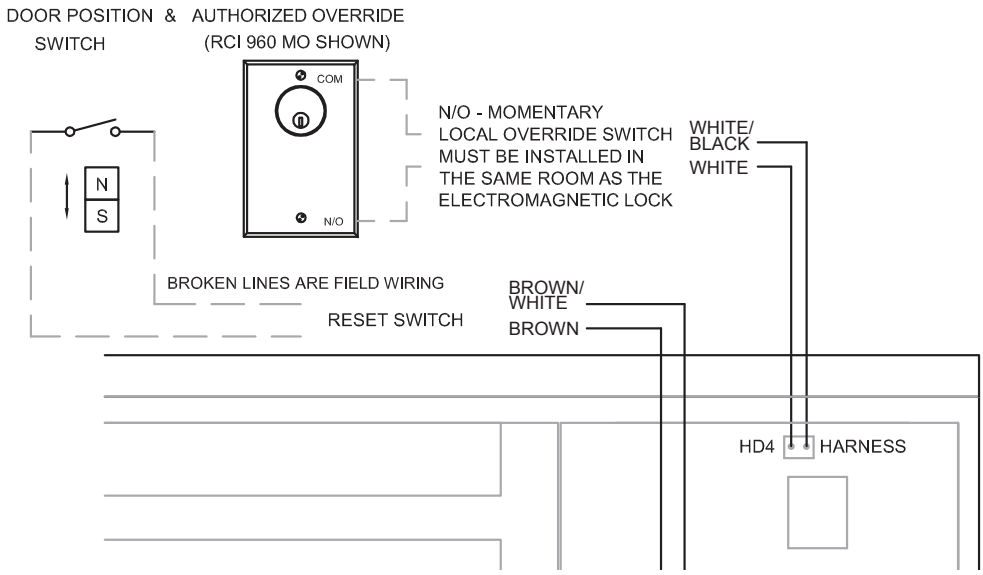

Reset and Override Wiring for Double Doors

Diagram reflects status with power on and door opened.

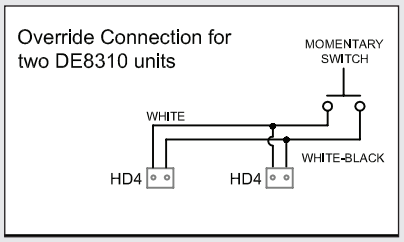

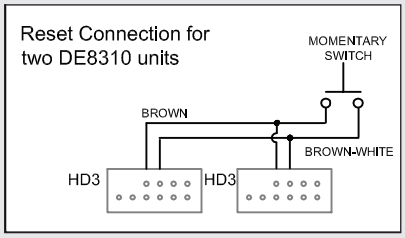

Inspection and Maintenance

This product and all related accessories or parts must be inspected and maintained on a **quarterly basis**. Contacting surfaces of the electromagnetic lock and armature plate must be kept free of contaminating materials. Surfaces must be cleaned periodically with a non-abrasive cleaner.

All mounting fasteners must be inspected on a **quarterly basis**. When properly installed, the ends of the armature plate allow a slight movement but the plate will feel secure when grasped at the bolt. There should be no movement to the mounting bracket or housing of the electromagnetic lock.

For added safety, thread locking compound has been provided for the armature plate bolt and the four captive electromagnetic lock mounting screws.

WARNING: Improper installation, maintenance, inspection or usage of the product or any related accessories or parts may cause the electromagnetic lock, armature plate and associated hardware to disengage and fall, causing serious bodily injury and property damage.

PLEASE DELIVER ALL INSTALLATION INSTRUCTIONS TO THE END-USER UPON COMPLETION OF THE INSTALLATION.

PLEASE DELIVER END USER GUIDE CONTAINED SEPARATELY IN THIS PACKAGE TO THE END-USER UPON COMPLETION OF THE INSTALLATION.

8300 Delayed Egress Series Troubleshooting Guide

PROBLEM	SOLUTION
Cannot remove the lock mounting bracket from top of magnet for installation.	Remove anti-tamper screw and cavity screw. Insert supplied Allen wrench into mounting bolt holes in the bottom of the lock housing and turn. (See Fig.1)
Lock is installed but has no holding force at all.	Check power supply. DC power should be within 12-24VDC. Check connections at power supply, connected releasing devices, lock terminals and lock circuit board to magnet core.
Lock has enough holding force to lightly hold a screwdriver or set of pliers but door will not lock.	Check to see that armature plate is correctly aligned with the electromagnetic lock. If there is improper alignment, make a 1/4" turn of the armature plate mounting bolt and check for alignment. Make sure to follow the armature plate mounting instructions on the template and Page 1 of this install.
Lock is operating and locking but the armature plate is "humming" against the surface of the lock.	This generally indicates that the lock is either operating on AC voltage or there is some AC voltage present in the DC supply. A properly filtered and regulated DC power supply is required to achieve optimal operation from the lock.
Lock is not releasing immediately upon removal of power	Ensure that switching devices are interrupting the DC power and not the AC power supply voltage. Ensure rubber washer on armature plate mounting bolt has not been removed or damaged. Check that switching device interrupts the positive wire and not the negative wire. (See Fig. 2) Remove any Diodes or other suppression devices that may be installed.

Product Mounting Accessories Guide

Accessories may impact holding force.
(Separate installation instructions provided with accessories.)

PART	USAGE	EXAMPLE
Angle Bracket	Used in a narrow head jamb situation or for center-hung doors. Any place where there is insufficient frame depth to mount the lock. Available in several different sizes and finishes.	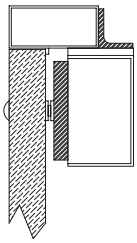
"L" Bracket	Required wherever there is insufficient space on the frame header to mount the lock. The lock mounts to the underside of the "L" bracket and the "L" bracket then gets mounted to the doorframe. Available in several different sizes and finishes.	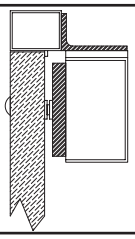
Filler Bars	Used to provide extra mounting space in a hollow metal or wood frame where the door stop of the frame is not thick enough to allow a lock to be installed. Available in several different widths.	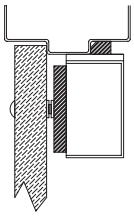
Spacer Bars	For use when an obstruction in the door prevents the installation of the armature plate at a proper height. If the armature plate needs to be lowered then a spacer bar can be used to lower the lock from the frame. Available in several different thicknesses.	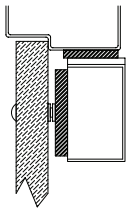
Armature Holder	For use with doors that do not permit the armature plate to be mounted low enough to meet the magnet surface. Eg: Some aluminum framed commercial glass doors. The armature holder can be mounted to whatever frame is available and the armature plate in turn mounted to the holder. Available in pocket style only.	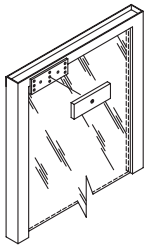

(See listing details on page 3)

Also Available Separately:

BC1M-30 – 30 Second Release Delay Sign (English)

WIRE GAUGE SELECTIONS

Total One Way Length of Wire Run (ft.)	Load Current @24V							
	1/4A	1/2A	3/4A	1A	1-1/4A	1-1/2A	2A	3A
100	24	20	18	18	16	16	14	12
150	22	18	16	16	14	14	12	10
200	20	18	16	14	14	12	12	10
250	18	16	14	14	12	12	12	10
300	18	16	14	12	12	12	10	--
400	18	14	12	12	10	10	--	--
500	16	14	12	10	10	--	--	--
750	14	12	10	10	--	--	--	--
1000	14	10	10	--	--	--	--	--
1500	12	10	--	--	--	--	--	--

Total One Way Length of Wire Run (ft.)	Load Current @12V							
	1/4A	1/2A	3/4A	1A	1-1/4A	1-1/2A	2A	3A
100	20	18	16	14	14	12	12	10
150	18	16	14	12	12	12	10	--
200	16	14	12	12	10	10	--	--
250	16	14	12	10	10	10	--	--
300	16	12	12	10	10	--	--	--
400	14	12	10	--	--	--	--	--
500	14	10	10	--	--	--	--	--
750	12	10	--	--	--	--	--	--
1000	10	--	--	--	--	--	--	--
1500	10	--	--	--	--	--	--	--

Wire Gauge Chart courtesy of Electronic Locking Devices by John L. Schum

© 2016 RUTHERFORD CONTROLS INT'L | A DORMA GROUP COMPANY
WWW.RUTHERFORDCONTROLS.COM • PHONE: 1.800.265.6630 • FAX: 1.800.482.9795 • E-MAIL: SALES@RUTHERFORDCONTROLS.COM