DCP-SP1 / DCP-SP2

Padlock Bumper Plate for use with DCP and DCP500

SPECIFICATIONS

Function: Protects face of cabinet from padlock and keys
Works with: Olympus DCP and DCP500 padlockable cam locks
Handing: Available for right-hand or left-hand cabinet doors (LH version coming June 2018)
Size: 3.937" wide x 2.913" high
Thickness: .0456"
Finish: Polished stainless steel (US32) or satin chrome (US26D)

INCLUDES

Adhesive sheet to protect finish and two screws for mounting



DCP-SP1 right-hand plate (shown)

DCP-SP2 left-hand plates

DCP-SP1 (RH) / DCP-SP2 (LH) BUMPER PLATES

Available in US32 (polished stainless steel) or US26D (satin chrome). For use on right-hand (DCP-SP1) or left-hand (DCP-SP2) cabinet doors. Bumper plates and padlockable cam locks sold separately.

AVAILABLE FINISHES



US26D



US26

DCP-SP2 (LH)

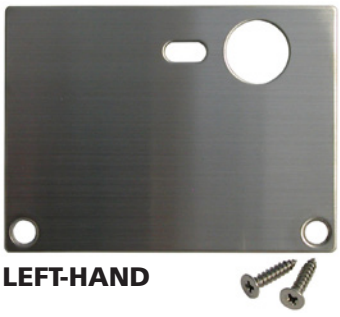

LEFT-HAND

DCP-SP1 (RH)

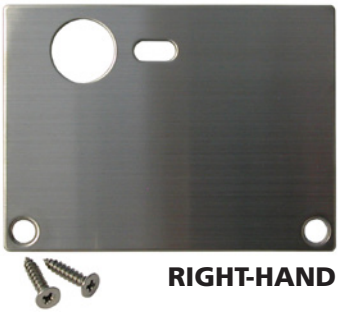

RIGHT-HAND

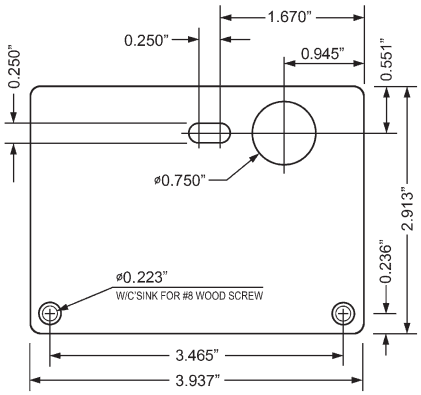

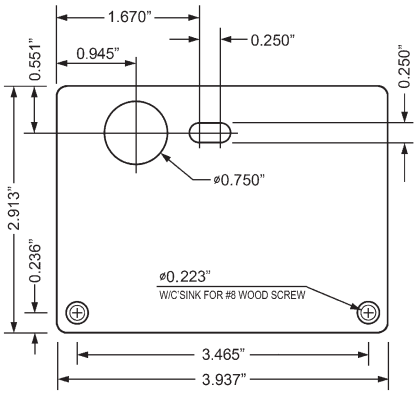

FOR USE WITH:



DCP or DCP500
Padlockable cam locks

CABINET DOORS

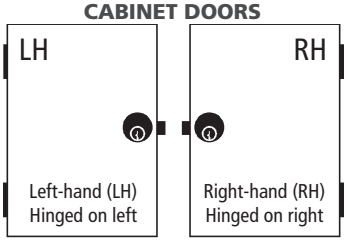

WARNING: This product can expose you to chemicals including chromium, which is known to the State of California to cause cancer and birth defects or other reproductive harm. For more information go to www.P65Warnings.ca.gov.

OLYMPUS LOCK INC

© 2020 Olympus Lock, Inc.