RW/PA DOOR CLOSER

INSTALLATION INSTRUCTION

STANDARD MOUNT
(PULL SIDE)

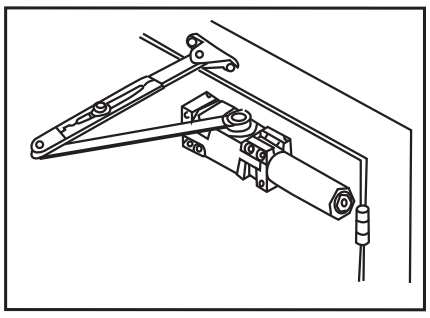

TOP JAMB MOUNT
(PUSH SIDE)

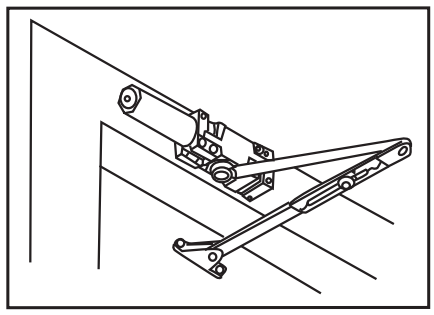

PARALLEL MOUNT
(PUSH SIDE)

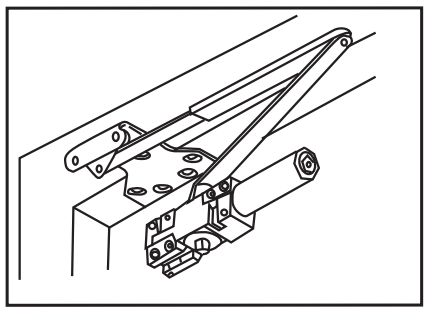

MAXIMUM DOOR WIDTH		FULL TURNS REQUIRED
EXTERIOR DOORS	INTERIOR DOORS	
———	5 lb-f*	5 TURNS C.C.W.
8.5 lb-f*	34" (864)	2 TURNS C.C.W.
30" (762)	38" (962)	0 TURNS
36" (914)	48" (1219)	5 TURNS C.W.
42" (1067)	54" (1372)	10 TURNS C.W.
48" (1219)	60" (1524)	15 TURNS C.W.

HOW TO DEFINE HAND OF DOOR

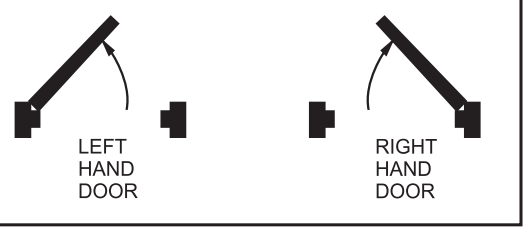

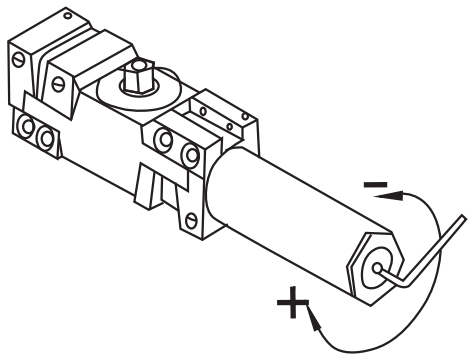

Spring Power
Adjustment

CONTROL RANGE

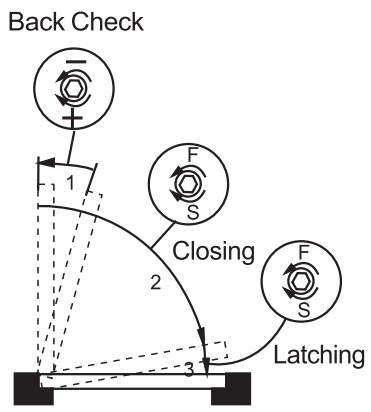

STANDARD INSTALLATION
CLOSER MOUNTED ON DOOR ON PULL SIDE

This drawing shown is LEFT HAND DOOR, For RIGHT HAND DOOR should be installed in symmetry.

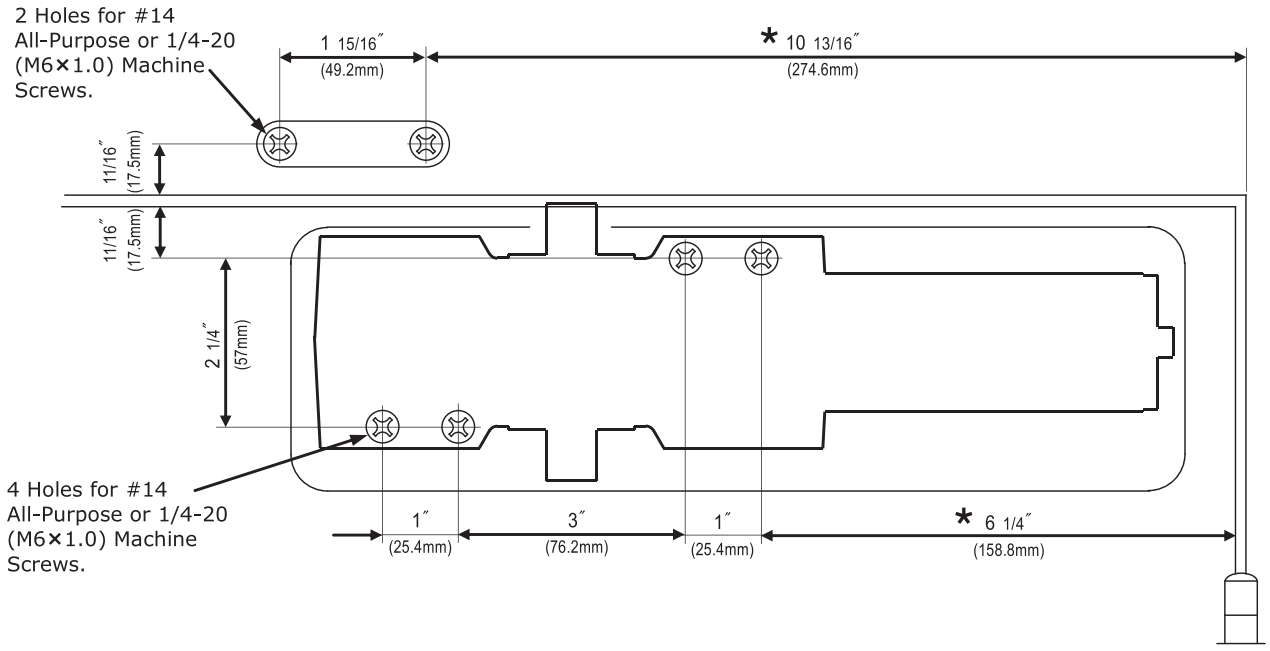

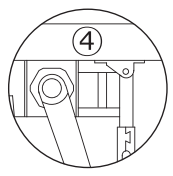

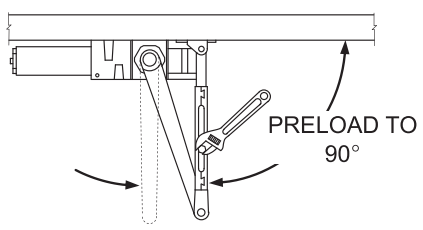

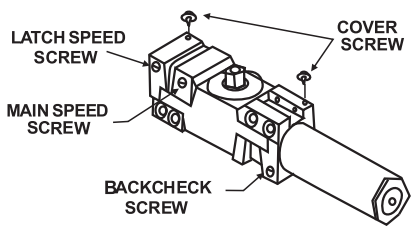

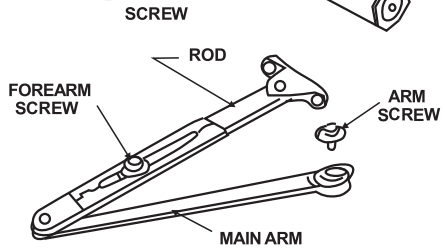

1.Adjust spring power to match door width as indicated by chart on page 1.
2.Mount closer on door as dimensions shown. Tube end toward hinge.If pivots are used.locate closer and shoe from CENTERLINE OF PIVOT.
(For offset pivots,pls increase the marked dimensions by 1/8")
3.Place main arm on top of shaft, 100°to closer body, insert arm screw into top of shaft and tighten.
4.Attach shoe to frame as shown.(if more latching power is required, rotate shoe 180°)
5.Open door and insert rod in forearm.
6.With forearm at right angle to door(90°),insert forearm set screw and tighten.
(IF HOLD OPEN ARM IS USED, THE NUT IS ON THE TOP FOR RH DOOR AND BOTTOM FOR LH DOOR)

REGULATION:

A'Normal'closing time from 90° open position to door stop position is 4-8 secs, evenly divided between main swing speed and latch swing speed. Use socket key(fumished) to adjust speed. To slow main speed of door, tum regulating screw nearest shaft clockwise. To slow latch speed, tum regulating screw nearest latch clockwise.

BACK CHECK

To increase back-check force, tum regulating screw nearest hinge clockwise.

DO NOT USE ABRUPT BACKCHECK OR EXPECT DOOR CLOSER TO ACT AS A DOOR STOP.

COVER

Place insert in proper cutout, then push cover against door . Tighten both cover screw securely.

HOLD OPEN ADJUSTMENT(when hold open arm is used)

Loose adjusting nut, open door to desired hold open position and tighten nut.
Do not permit door to swing beyond hold open setting.

TOP JAMB INSTALLATION
CLOSER MOUNTED TOP JAMB ON PUSH SIDE OF DOOR

This drawing shown is RIGHT HAND DOOR,
For LEFT HAND DOOR should be installed in symmetry.

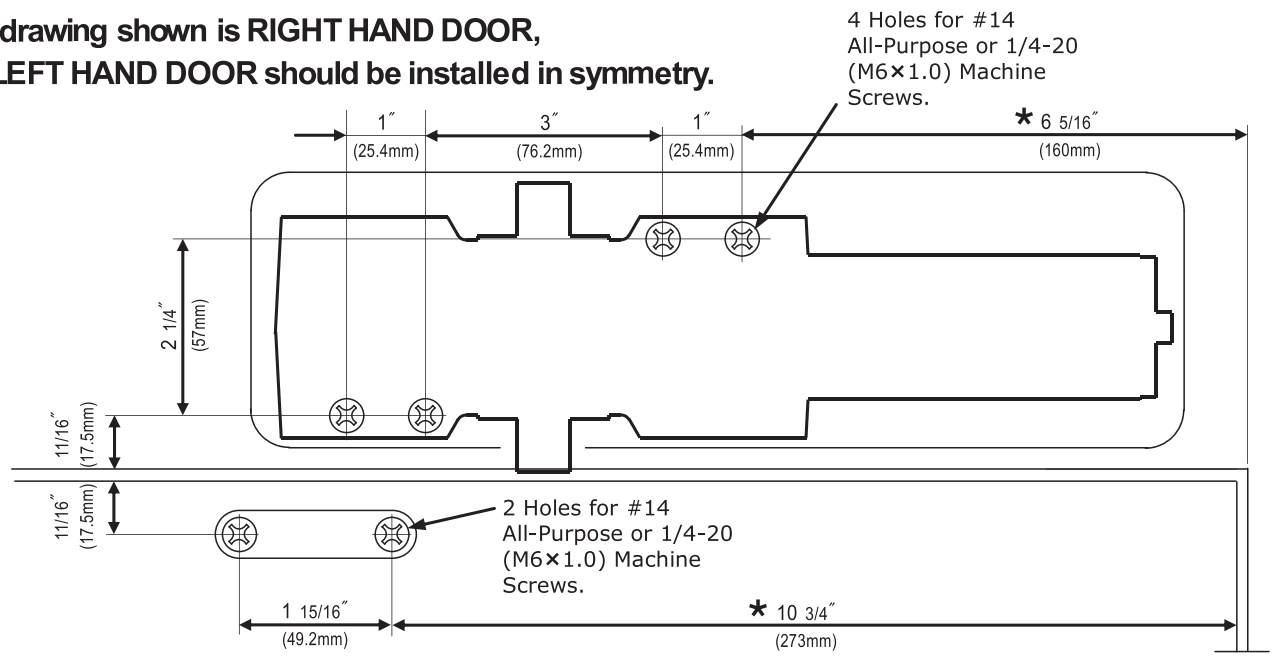

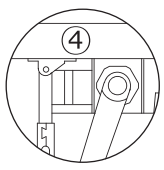

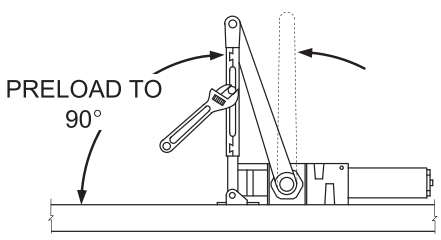

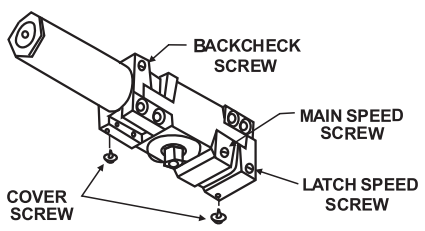

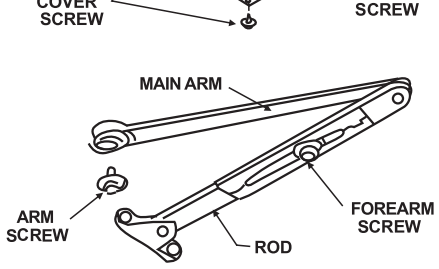

1.Adjust spring power to match door width as indicated by chart on page1.
2.Mount closer on frame as dimension shown. Tube end toward hinge.If pivots are used.locate closer and shoe from CENTERLINE OF PIVOT.
(For offset pivots,pls increase the marked dimensions by 1/8")
3.Place main arm on top of shaft, 100°to closer body, insert arm screw into top of shaft and tighten.
4.Attach shoe to door as shown.(if more latching power is required, rotate shoe 180°)
5.Open door and insert rod in forearm
6.With forearm at right angle to door(90°),insert forearm set screw and tighten.
(IF HOLD OPEN ARM IS USED, THE NUT IS ON THE BOTTOM FOR RH DOOR AND TOP FOR LH DOOR)

REGULATION:

A'Normal'closing time from 90° open position to door stop position is 4-8 secs, evenly divided between main swing speed and latch swing speed. Use socket key(fumished) to adjust speed. To slow main speed of door, tum regulating screw nearest shaft clockwise. To slow latch speed, tum regulating screw nearest latch clockwise.

BACK CHECK

To increase back-check force, tum regulating screw nearest hinge clockwise. DO NOT USE ABRUPT BACKCHECK OR EXPECT DOOR CLOSER TO ACT AS A DOOR STOP.

COVER

Place insert in proper cutout, then push cover against frame . Tighten both cover screw securely.

HOLD OPEN ADJUSTMENT(when hold open arm is used)

Loose adjusting nut, open door to desired hold open position and tighten nut. Do not permit door to swing beyond hold open setting.

PARALLEL ARM INSTALLATION
CLOSER MOUNTED ON DOOR ON PUSH SIDE

This drawing shown is RIGHT HAND DOOR,For LEFT HAND DOOR should be installed in symmetry

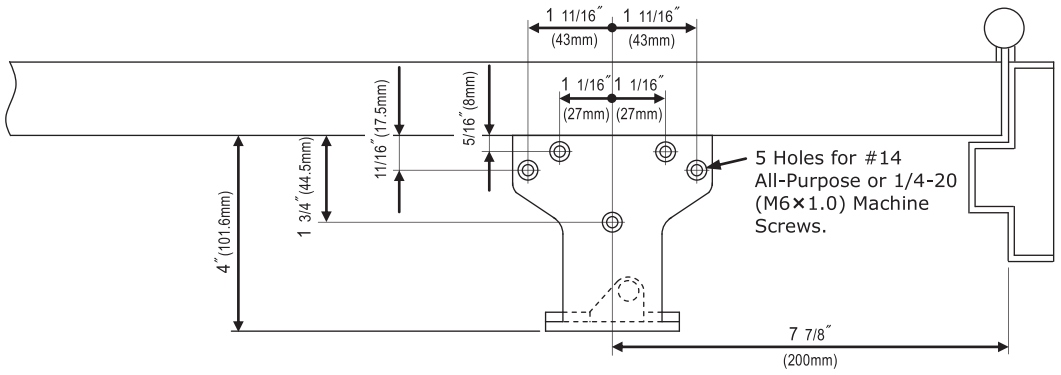

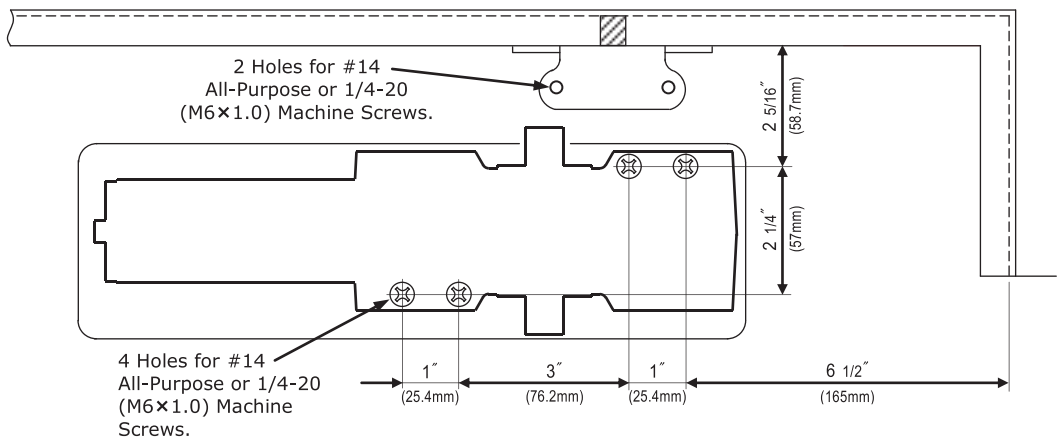

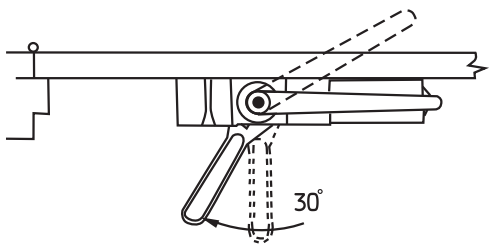

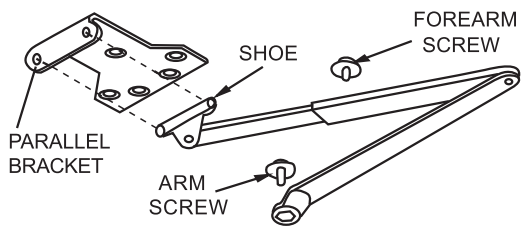

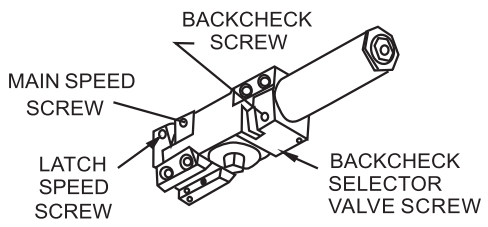

1. Before installation, turn Back Chack selector valve (found on the opposite side of closer from back check screw side) ALL THE WAY IN (CLOCKWISE).
2. Adjust spring power to match door width as Indicated by chart on page1.
3. Mount closer on door as dimensions shown. Tube end toward latch. If pivots are used, locate closer and parallel bracket from CENTERLINE OF PIVOT.
4. Place open end wrench on bottom shaft and turn toward hinge jamb about 30° and then place main arm on top shaft, insert arm screw into top of shaft and tighten.
5. Attach parallel bracket on frame as dimensions shown.
6. Attach rod and shoe to parallel bracket as shown.
7. Insert rod in forearm, and then insert main arm to closer parallel to door. Then insert forearm set screw and tighten.

(IF HOLD OPEN ARM IS USED, THE NUT IS ON THE TOP FOR RH DOOR AND BOTTOM FOR LH DOOR)

REGULATION:

A Normal closing time from 90° open position to door stop position is 4-8 secs, evenly divided between main swing speed and latch swing speed. Use socket key(furnished) to adjust speed. To slow main speed of door, turn regulating screw nearest shaft clockwise. To slow latch speed, turn regulating screw nearest hinge clockwise.

BACK CHECK

To increase back-check force, turn regulating screw nearest hinge clockwise. DO NOT USE ABRUPT BACKCHECK OR EXPECT DOOR CLOSER TO ACT AS A DOOR STOP.

COVER

Place insert in proper cutout, then push cover against frame . Tighten both cover screw securely.

HOLD OPEN ADJUSTMENT (when hold open arm is used)

Loose adjusting nut, open door to desired hold open position and tighten nut. Do not permit door to swing beyond hold open setting.

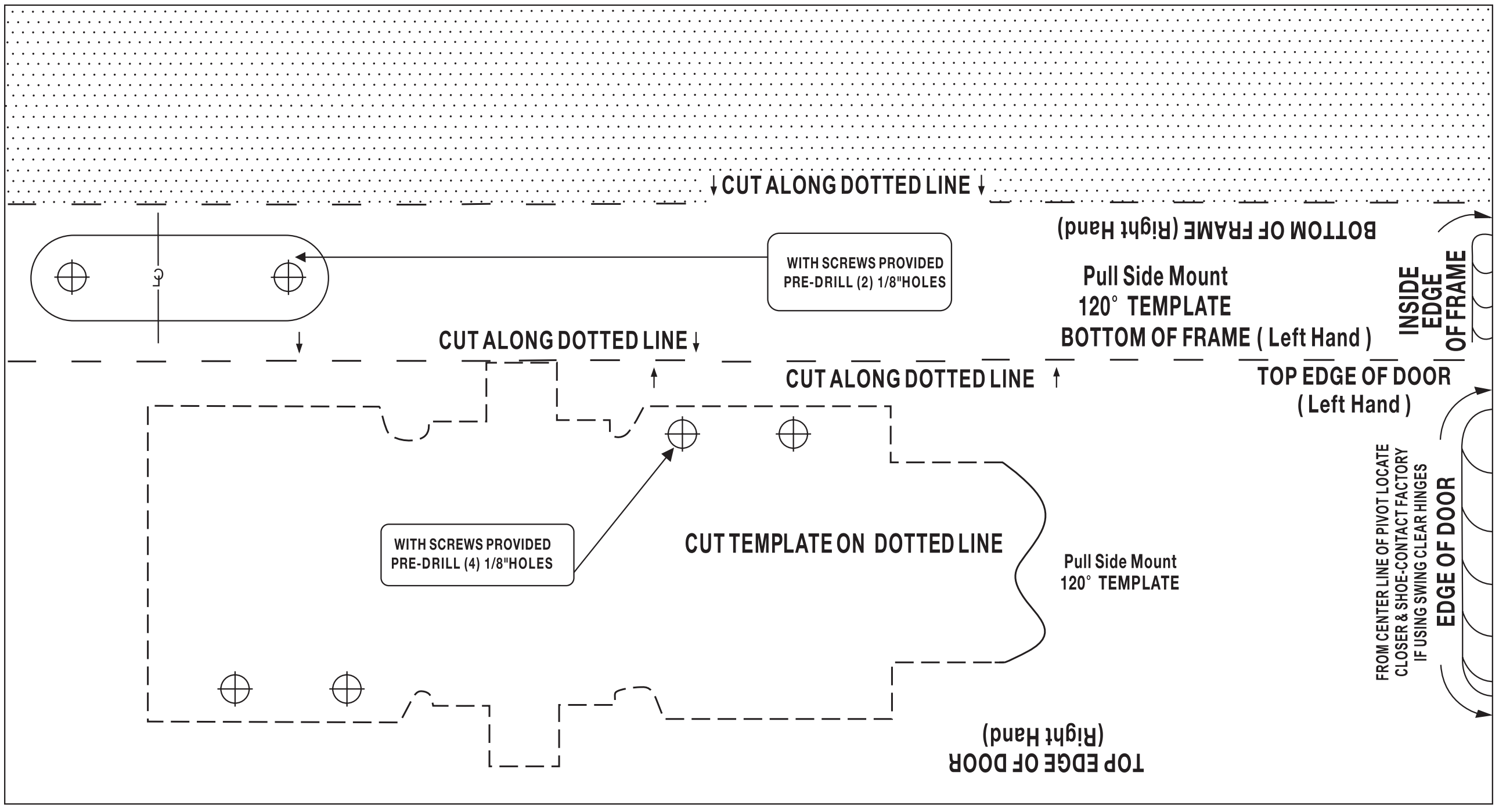
CUT ALONG DOTTED LINE
WITH SCREWS PROVIDED
PRE-DRILL (2) 1/8"HOLES
BOTTOM OF FRAME (Right Hand)
Pull Side Mount
120° TEMPLATE
BOTTOM OF FRAME (Left Hand)
INSIDE EDGE OF FRAME
CUT ALONG DOTTED LINE
CUT ALONG DOTTED LINE
TOP EDGE OF DOOR
(Left Hand)
WITH SCREWS PROVIDED
PRE-DRILL (4) 1/8"HOLES
CUT TEMPLATE ON DOTTED LINE
Pull Side Mount
120° TEMPLATE
FROM CENTER LINE OF PIVOT LOCATE
CLOSER & SHOE-CONTACT FACTORY
IF USING SWING CLEAR HINGES
EDGE OF DOOR
TOP EDGE OF DOOR
(Right Hand)

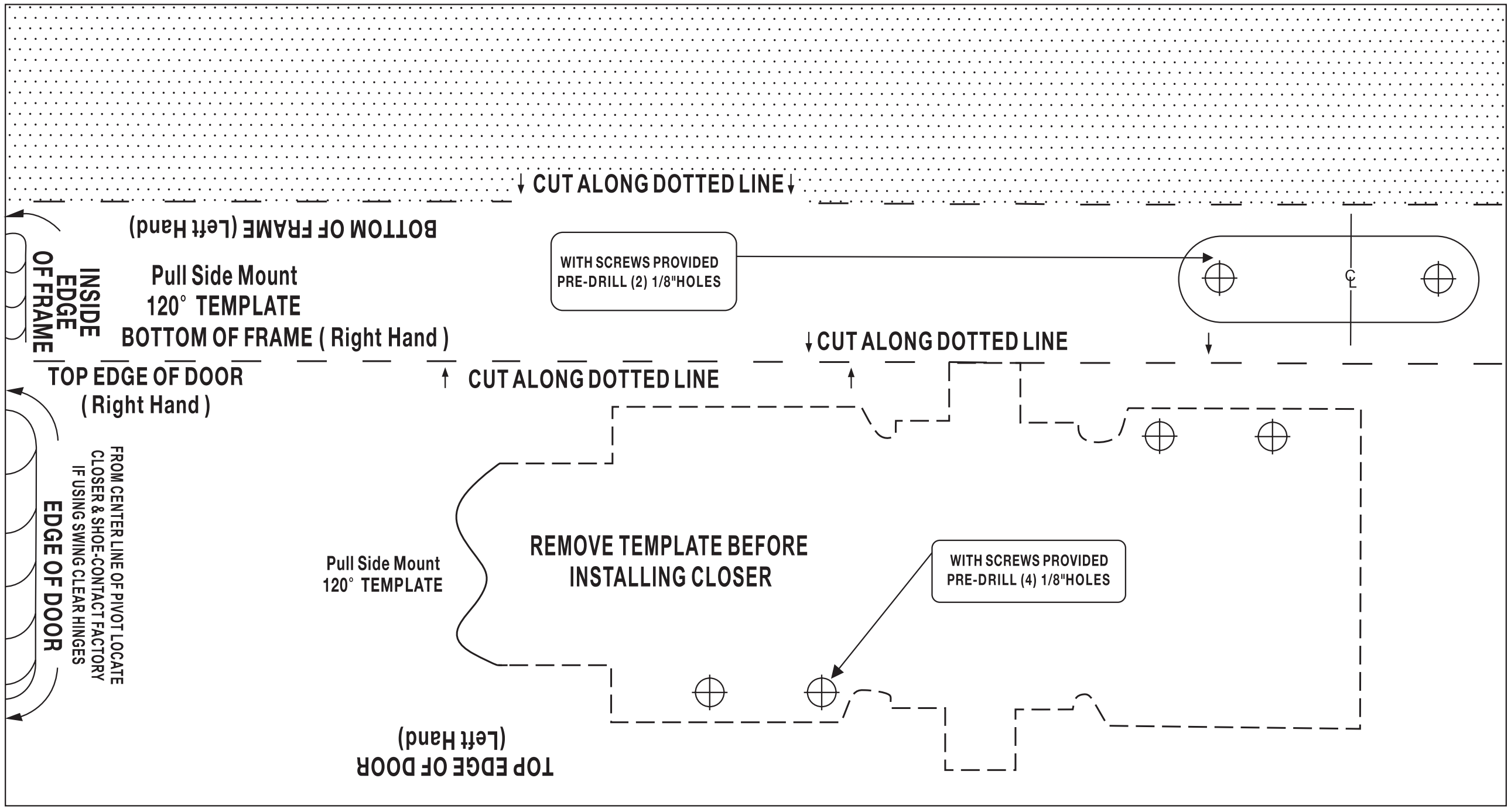
CUT ALONG DOTTED LINE
BOTTOM OF FRAME (Left Hand)
INSIDE EDGE OF FRAME
Pull Side Mount
120° TEMPLATE
BOTTOM OF FRAME (Right Hand)
WITH SCREWS PROVIDED
PRE-DRILL (2) 1/8"HOLES
CUT ALONG DOTTED LINE
TOP EDGE OF DOOR
(Right Hand)
CUT ALONG DOTTED LINE
FROM CENTER LINE OF PIVOT LOCATE
CLOSER & SHOE-CONTACT FACTORY
IF USING SWING CLEAR HINGES
EDGE OF DOOR
Pull Side Mount
120° TEMPLATE
REMOVE TEMPLATE BEFORE
INSTALLING CLOSER
WITH SCREWS PROVIDED
PRE-DRILL (4) 1/8"HOLES
TOP EDGE OF DOOR
(Left Hand)

CUT & ALIGN THIS EDGE WITH BOTTOM
SURFACE OF FRAME STOP
(LEFT HAND)

WITH SCREWS PROVIDED
PRE-DRILL (4) 1/8"HOLES

PARALLEL ARM
APPLICATION MOUNT
180° TEMPLATE

SCREW IN VALVE
ON BACK OF CLOSER

FROM CENTER LINE OF PIVOT LOCATE
CLOSER & SHOE-CONTACT FACTORY
IF USING SWING CLEAR HINGES

HINGE LINE /DOOR EDGE

CUT & ALIGN THIS EDGE WITH BOTTOM
SURFACE OF FRAME STOP
(RIGHT HAND)

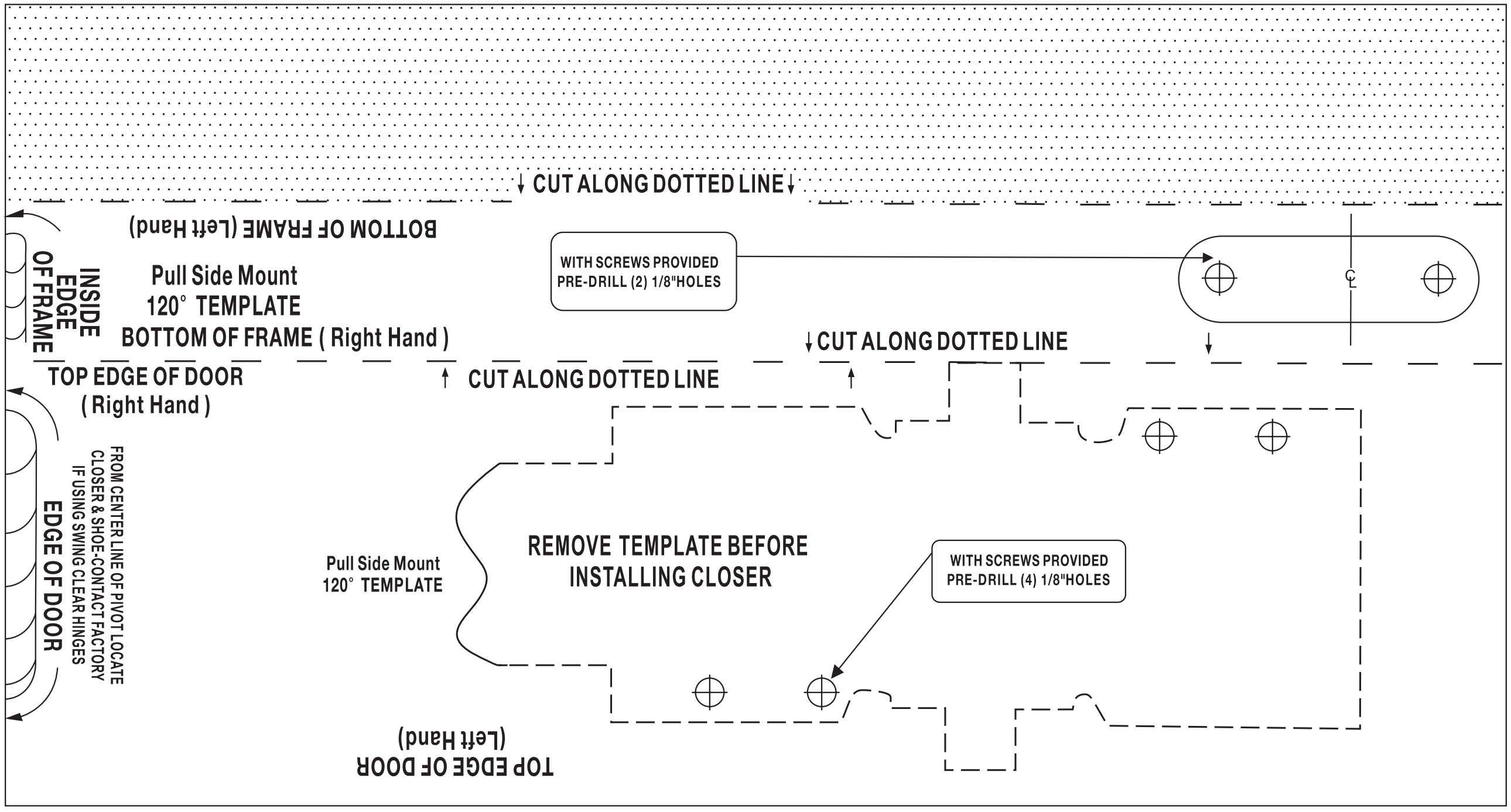
CUT ALONG DOTTED LINE
BOTTOM OF FRAME (Left Hand)
INSIDE EDGE OF FRAME
Pull Side Mount
120° TEMPLATE
BOTTOM OF FRAME (Right Hand)
WITH SCREWS PROVIDED
PRE-DRILL (2) 1/8"HOLES
CUT ALONG DOTTED LINE
TOP EDGE OF DOOR
(Right Hand)
CUT ALONG DOTTED LINE
FROM CENTER LINE OF PIVOT LOCATE
CLOSER & SHOE-CONTACT FACTORY
IF USING SWING CLEAR HINGES
EDGE OF DOOR
Pull Side Mount
120° TEMPLATE
REMOVE TEMPLATE BEFORE
INSTALLING CLOSER
WITH SCREWS PROVIDED
PRE-DRILL (4) 1/8"HOLES
TOP EDGE OF DOOR
(Left Hand)

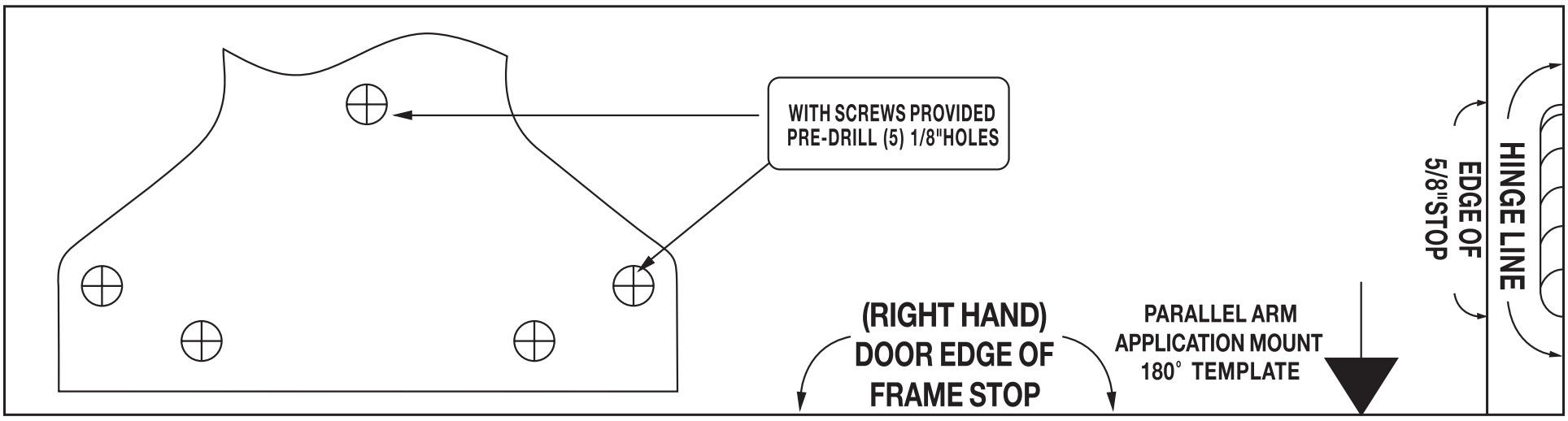
WITH SCREWS PROVIDED
PRE-DRILL (5) 1/8"HOLES
(RIGHT HAND)
DOOR EDGE OF
FRAME STOP
PARALLEL ARM
APPLICATION MOUNT
180° TEMPLATE
HINGE LINE
EDGE OF
5/8"STOP

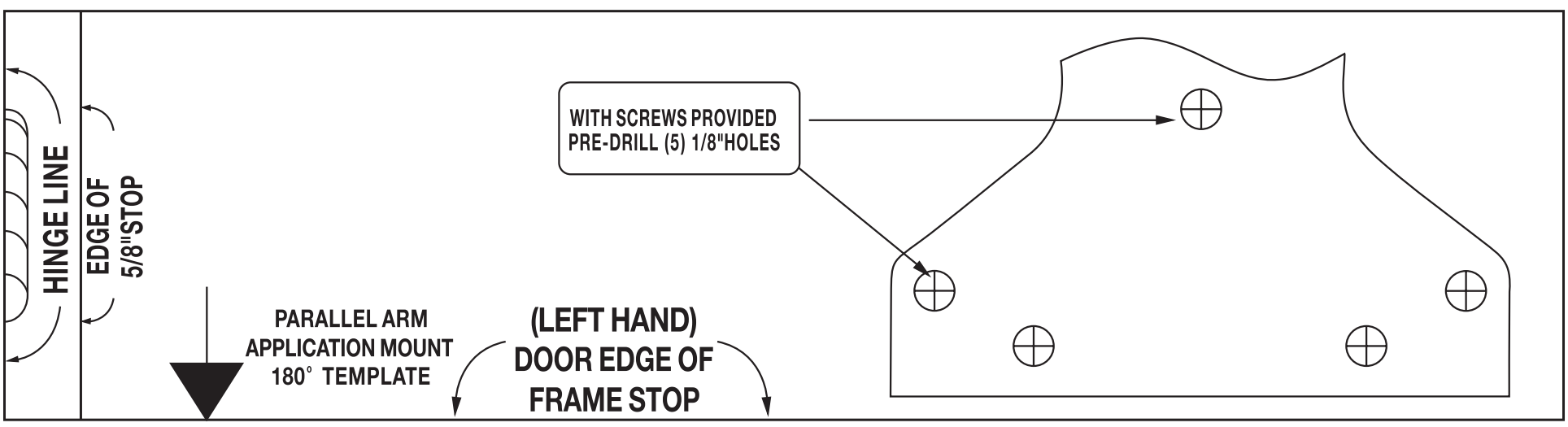
WITH SCREWS PROVIDED
PRE-DRILL (5) 1/8"HOLES
HINGE LINE
EDGE OF
5/8"STOP
PARALLEL ARM
APPLICATION MOUNT
180° TEMPLATE
(LEFT HAND)
DOOR EDGE OF
FRAME STOP