ADJUSTABLE POWER DOOR CLOSER

INSTALLATION & INSTRUCTION SHEET

PUSH SIDE MOUNTED (PARALLEL ARM) DS/DSHO

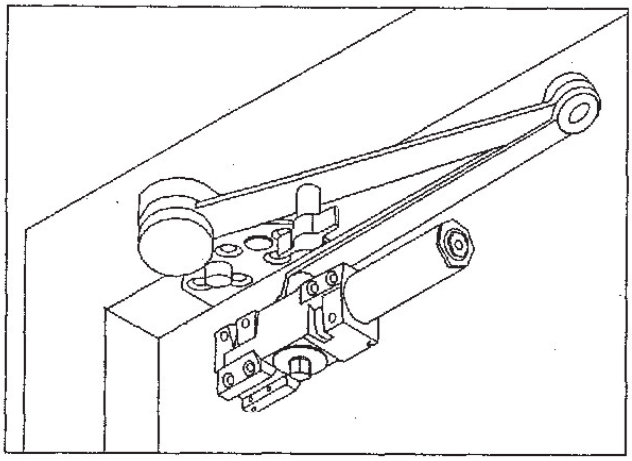

standard installation

GENERAL NOTES

The DCH4000 SERIES closer is non- handed and designed to meet entrance accessibility requirements,Before installation, determine hand of door first Refer to the drawing (right),then select the proper installation template.

The DCH4000 SERIES closer can be adjusted to handle all exterior doors up to 4'0" and interior doors up to 5'0" wide. Adjust the spring power as shown before installing the closer.Turn the spring adjustment nut clock-wise or counter- clockwise the required number of turns to match door width as indicated in chart below.

MAXIMUM DOOR WIDTH		FULL TURNS REQUIRED
EXTERIOR DOORS	INTERIOR DOORS	
	5lb-f	5TURNS C.C.W
8.5lb-f	34"	2TURNS C.C.W
30"	38"	0TURNS
36"	48"	5TURNS C.W
42"	54"	10TURNS C.W
48"	60"	15TURNS C.W

* Opening Force on 36" Door

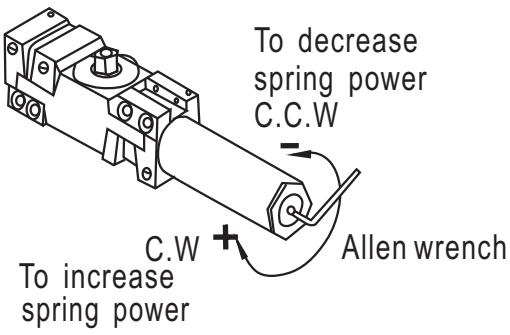

HOW TO TELL HAND OF DOOR

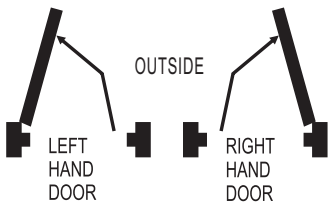

CLOSER CONTROL DIAGRAM

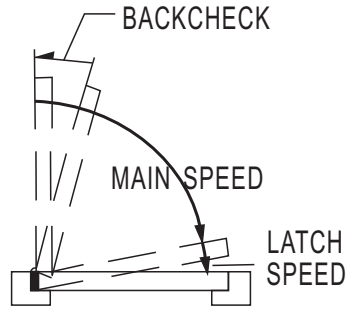

IMPORTANT - When adjusting spring power DO NOT exceed the maximum number of turns in either direction! Beyond either maximum number of turns may damage closer.

MOUNTED STOP FACE (PUSH SIDE) PARALLEL ARM

TOP RAIL LESS THAN 5-1/2 ", DROP PLATE WILL BE REQUIRED.
(AVAILABLE FROM DEALER)

MAXMUM OPENING 110°

PUSH SIDE MOUNTING

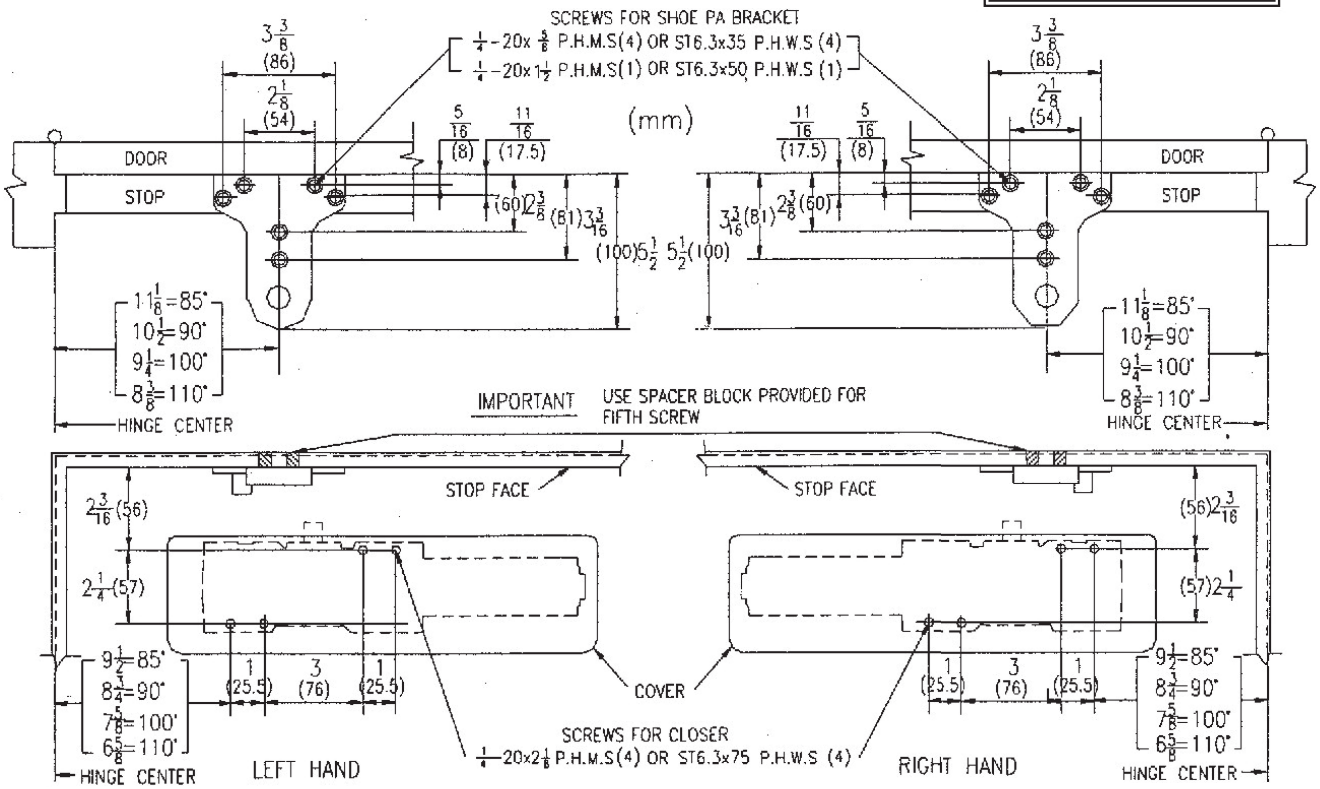

BEFORE INSTALLING MOUNTED STOP FACE (PARALLEL ARM) TURN BACKCHECK SELECTOR VALVE
(FOUND ON OPPOSITE SIDE OF CLOSER FROM REGULATING SCREW SIDE) ALL THE WAY IN (CLOCKWISE)!

RIGHT HAND ASSEMBLY SHOWN

HANDING & ASSEMBLY OF DS / DSHO SHOE

Fig. 1

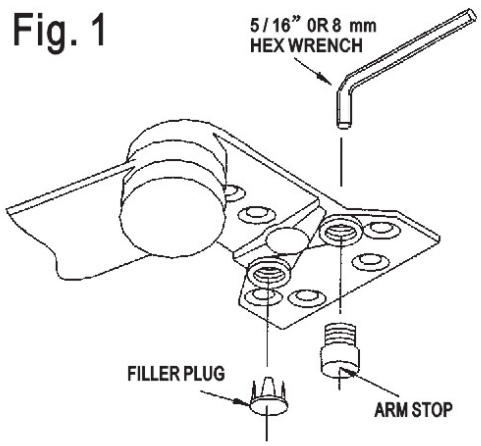

CAUTION

IMPROPER INSTALLATION OR REGULATION MAY RESULT IN PERSONAL INJURY OR PROPERTY DAMAGE.

FOLLOW ALL INSTRUCTIONS CAREFULLY. FOR QUESTIONS CONTACT DEALER

Fig. 2

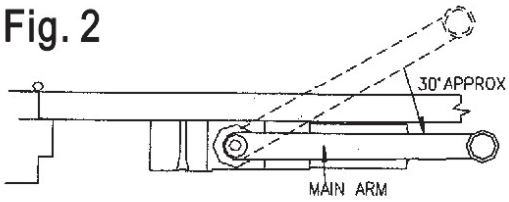

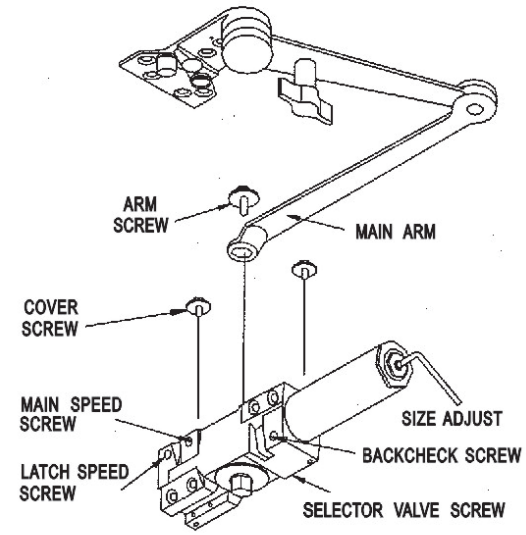

REMOVABLE INSERTS TO CONVERT TO OPPOSITE HAND COVER

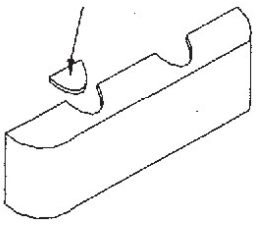

Both D.S. /DSHO shoes must be "handed" to match door BEFORE mounting. See Fig. 1

For Left Hand doors: All shoes are shipped assembled for left hand doors. Insert 5/16" (8mm) Hex wrench into arm stop and turn counter - clockwise to seat stop as tightly as possible.

For Right Hand doors: (see illustration) Push filler plug out of shoe. Using a 5/16" (8 mm) Hex wrench, turn arm stop clockwise to remove from shoe. Thread arm stop in hole marked "R". Turn wrench counter - clockwise, seating stop as tightly as possible. Insert filler plug into other hole.

INSTALLATION & ADJUSTMENT INSTRUCTIONS

(LEFT HAND SHOWN - RIGHT HAND OPPOSITE)

BEFORE INSTALLING THE ARM - TURN BACKCHECK SELECTOR VALVE (on back of closer) ALL THE WAY IN.

1. Adjust spring power to match door width as indicated by chart on front page.
2. Select proper templating on opposite page, based on degree of opening / dead stop. The closer and arm holes must be located for same degree of opening / dead stop, Drill and / or tap mounting holes in door and head jamb.
3. Attach complete arm to closer, as shown at left, Arm will be at about a 30° angle to closer body. Fasten with arm shaft screw. The arm will appear to be in an incorrect position. This is to accommodate the pre - load required for parallel arm mounted door closers. See Fig. 2
4. Mount closer on door, using fasteners provided. NOTE: arm will provide some resistance.
5. Swing door open about 45° Mount shoe to frame stop per proper templating on opposite page. Be sure to install the "fifth" screw. if stop is not wide enough, use spacer block provided.

REGULATION

CAUTION DO NOT BACK VALVES OUT OF CLOSER OR A LEAK WILL RESULT

The BA series closer has been regulated prior to shipment If adjustments are necessary, carefully follow instructions,

CLOSING SPEED: See Closer Control Diagram on page 1

To adjust Main Speed, turn reg.screw clockwise to decrease or counter - clockwise to increase. To adjust Latch Speed, turn reg.screw clockwise to decrease or counter - clockwise to increase. Reg.screw locotions are shown at left and on label.

BACKCHECK: is essential for proper operation of Cush -Stop. Use enough backcheck to prevent arm from striking arm stop with impact. To increase resistance, turn reg. screw clockwise

— DO NOT USE ABRUPT BACKCHECK! —

6. Attach cover: place cover insert into proper slots for either R.H. or L.H. door. Place cover over closer and hold against door while tightening cover screws firmly.