911030-00

Chexit (CX)

VON DUPRIN

Wiring and Configuration

Installation Instructions

General Information

The Von Duprin Chexit device is designed for controlled egress applications. It meets both life safety and security needs, as well as the requirements of NFPA101 for “Special Locking Arrangement” and IBC “Special Egress-Control Devices”. All control inputs, auxiliary locking, local alarm and remote signaling outputs are self-contained in the Chexit assembly. Numerous field configurable options allow the device to be customized for the specific code or application requirements. The standard Chexit device sounds an alarm and keeps the door secured for 15 seconds following an exit attempt with immediate release upon fire.

Warnings, Cautions, and Notices

WARNING

Warnings indicate potentially hazardous conditions, which if not avoided or corrected, may cause death or serious injury.

CAUTION

Cautions indicate potentially hazardous conditions, which if not avoided or corrected, may cause minor or moderate injury. Cautions may also warn against unsafe practices.

NOTICE

Notices indicate a condition that may cause equipment or property damage only.

Parts Included



Security Screw Pack
(Install as required)

Controlled Egress Device
(CX98/99 Rim shown)



Wire Guard



Blocking Device Cable



Door Sign

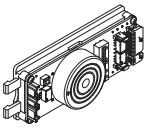

Module



Field Wiring Cable



Trim Device
Cable*

*Included when ordering with an E7500, M996L, E360L-BE or RX996L-M.

Table of Contents

Basic Features....2
Installation Components....3
Electrical Specifications....3
Typical Wiring Diagrams....4
Single Door....4
Double Door....5
Double-Egress Door....6
Electrical Trim....7
Retrofit Wiring....7
Installation....8
Basic Functional Test....11
Module Setup....11
Onboard Switch Settings Table....12
Advanced Function Test....13
Onboard Indicators....14
Troubleshooting....15

CAUTION

- Do not exceed rated specifications.
- The Chexit device must be installed in accordance with these instructions by a qualified electrician.
- Wiring and applications must be in accordance with all local codes and regulations.

1 Basic Features

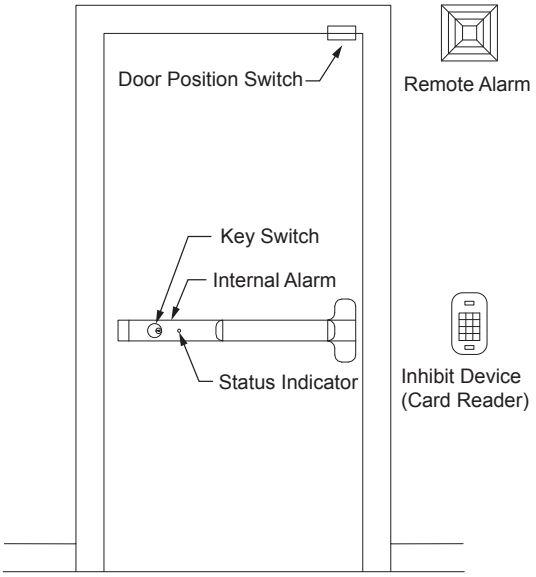

Inputs & Outputs

Fire Alarm Input

⚠ CAUTION

This input releases the push pad immediately, allowing egress, and unlocks the fail safe electric lever trim to allow entry.

The Internal Alarm can be silenced during a fire input via an onboard switch setting.

Inhibit Input (Access Control)
This optional input is provided to allow authorized egress or entry when the device is Armed using an external card reader, Key Switch, etc. It also allows remote reset of the Chexit in an alarmed condition. The ability to reset alarms with the inhibit input can be disabled via an onboard switch setting.

Door Position Switch Input
An optional Door Position Switch (DPS) can provide door position status to Chexit for additional security, ensuring that the door is closed, and can cause alarm when the door is left or forced open.

Gang Bus
The Gang bus allows a Chexit device to signal other Chexit devices when it enters the Release Delay, allowing multiple doors to release at the same time in an emergency. Up to 8 devices may be connected to the Gang bus.

Alarm Relay Contacts
The Alarm Relay contacts are provided as a means to control a Remote Alarm, such as a horn or lamp, or signal an external monitor. The contacts can be configured with a jumper as Normally Open or Normally Closed, and become active upon entering an alarmed condition.

Secure Relay Contacts
The Secure Relay contacts are provided as a means to signal an external monitor. The contacts can be configured as Normally Open or Normally Closed with a jumper, and become active when the DPS indicates the door is closed and the Push Pad is locked.

Delays

Release Delay
When the Push Pad is pushed and the Nuisance Delay expires, the Chexit enters the Release Delay with alarm. During the Release Delay, the Internal Alarm sounds, the Alarm Relay activates, and the Chexit keeps the Push Pad locked for 15 seconds (less any time already elapsed during the Nuisance Delay). Once started, the Release Delay sequence will not stop and the Chexit will unlock.

Nuisance Delay
When a Chexit is located in a public area, it can be desirable to limit false releases when the Push Pad is accidentally pushed. The Nuisance Delay is the brief time a Push Pad can be accidentally pushed before the Release Delay sequence starts. If the Nuisance Time is set to 0 seconds, the Chexit will enter Release Delay as soon as the Push Pad is pushed (when armed). Setting the Nuisance Time to 1, 2, or 3 seconds allows the Push Pad to be pressed for 1 to 3 seconds before the Chexit goes into Release Delay. If the Nuisance Audio and Nuisance Delay are both on, the Internal Alarm will pulse during the Nuisance Delay. The Alarm Relay does not activate during the Nuisance Delay. If the Push Pad is released before the Nuisance Delay expires, the Chexit will remain armed.

Rearm Delay
The Rearm Delay is the amount of time after the Key Switch or Inhibit Input is deactivated to when the device rearms. It is designed to give someone time to pass through the door before rearming occurs. The Rearm Time can be changed via the onboard switch settings from 0 to 28 seconds in 2 second increments.

If the Rearm Time is set to 30 seconds and a DPS is used, if the door is opened and the Rearm Time expires, there will be no alarm. The Chexit will rearm after the door is closed. If the door never opens, the Chexit will rearm after 30 seconds.

If not using a DPS, the Chexit will always rearm in 30 seconds.

DPS Delay
If the DPS detects that the door closed during the Rearm Delay, the Chexit ends the Rearm Delay and allows 2 seconds for the latch to clear the strike before rearming.

Interface

Key Switch
The Key Switch provides the means to Arm or Disarm/Reset the Chexit. Turning the Key Switch clockwise initiates the Rearm Delay, and turning the Key Switch counter-clockwise Disarms/Resets the Chexit. The Key Switch allows the key to be removed in either the Arm or the Disarm/Reset position.

ⓘ **Fail Safe, Fail Secure trims remain secure regardless of key position.**

Status Indicator
The red Status Indicator displays the status of the Chexit. The Status Indicator flashes slow if the Chexit is armed, flashes fast in an alarmed mode, is off when inhibited and on solid during Rearm Delay.

Internal Alarm
The Internal Alarm sounds the status of the Chexit. The Internal Alarm sounds continuously during and after a fire alarm or a Release Delay, pulses fast during the Nuisance Delay or a tamper and pulses slow during Disarmed Powerup mode.

Settings

Armed Powerup
When set to OFF, a power disruption and power return will put the Chexit in a disarmed, unlocked alarm mode.

Trim Fail Safe / Fail Secure (FS/FSE)
The trim input power can be set to FS (Fail Safe; locked when energized, unlocked when deenergized during power failure or fire alarm) or FSE (Fail Secure; unlocked when energized, locked when deenergized or during power failure).

The trim must be bought or modified to physically function as FS or FSE. This onboard setting only selects the trim input power.

ⓘ **Electric trim relocks when access control inhibit time expires.**

2 Installation Components

Table 1.1 Installation Components

Picture	Component	Function	Optional/Required
	1-1/4” Mortise Cylinder (with straight cam and 1/4” spacer)	Provides means to use the Key Switch.	**Required**
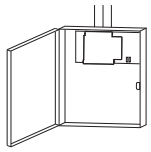	Power Supply PS902, PS904, PS906, or PS914	Provides power to Chexit.	**Required**
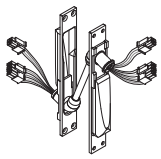	Power Transfer (EPT10-CON shown)	Provides means to transfer electrical power and signals through frame to door.	**Required** EPT10-CON Recommended Door loop or electric hinge can also be used.
	Fire Alarm **(NC contacts)**	Provides fire alarm status to Chexit so that it can unblock Push Pad in case of fire alarm.	**Required** Multiple Fire Alarms can be used in series.
	Inhibit (Access Control) Device (Card Reader, Key Switch, etc.) **(NC contacts)**	Provides additional means of signaling an authorized access to Chexit.	**Optional** Multiple Inhibit Devices can be used in series. If not used, connect green wire to red wire.
	Door Position Switch **(NC contacts)**	Provides door position status to Chexit for additional security.	**Optional** If not used, connect orange wire to red wire.
	Remote Alarm	Provides an additional alarm that may be louder or located in a remote location.	**Optional** If not used, insulate blue and brown wires separately.
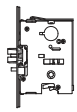	Electric Mortise Lock (E7500) (FS or FSE)	Provides means for Chexit to control entry through the door.	**Optional** (Included with CXE9975L)
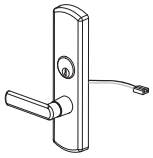	Electric Trim (M996L/E996L shown, or E360L-BE) (FS or FSE)	Provides means for Chexit to control entry through the door.	**Optional**

3 Electrical Specifications

Cable	Wire Color	Signal Description		Signal Type		Voltage Rating	Current Rating	Wire Gauge Minimum	Wire Length Maximum	One-Way Measurement From Power Transfer To
Field Wiring	Red	24 VDC	24 VDC	Power	Input	24 VDC	390 mA Holding*	18 AWG	200 feet	Power Supply
	Black	Ground	GND			Ground	1.25 A Inrush*	14 AWG	500 feet	
	Yellow	Fire Alarm	FA	NC	Input	24 VDC	10 mA	22 AWG	1000 feet	Fire Alarm
	Green	Inhibit	INH							Inhibit Device
	Orange	Door Position Switch	DPS							Door Position Switch
	Gray	Gang	GNG	Active Low	Bus					Ganged Chexit Device
	Blue	Alarm Relay	ALM	COM	Relay Contact Output	24 VDC	1 A	22 AWG	100 feet	Remote Alarm or External Monitor
	Brown			NO or NC						
	White	Secure Relay	SEC	COM						External Monitor
	Violet			NO or NC						
	Tan	Not Used		Not Used				Not Used		
	Pink									
Trim Device	Yellow	24 VDC	24 VDC	Power	Output	24 VDC	1 A	Trim Device Cable (Included when ordered with an E7500, M996L, RX996L-M or E360L)		
	Blue	Locking Ground	LGND			Ground				
	Green	Request to Enter	REN	NO	Input	24 VDC	10 mA			
	Black	Not Used		Not Used						

*Includes current from Chexit device only (does not include current from optional components such as Inhibit Device, Remote Alarm, or Trim Device)

4 Typical Wiring Diagrams

Single Door

- The Chexit is used as a controlled egress device with access control.
- The Inhibit Device (card reader) provides additional means of signaling an authorized access to Chexit.
- The Remote Alarm is used as an additional alarm in a remote location.
- Using a door position switch gives added security in case the door is not closed or is forced open.
- The Push Pad releases immediately when the Fire Alarm is active.
- If card readers are required on both sides of the door, the normally closed contacts of the readers should be wired in series.

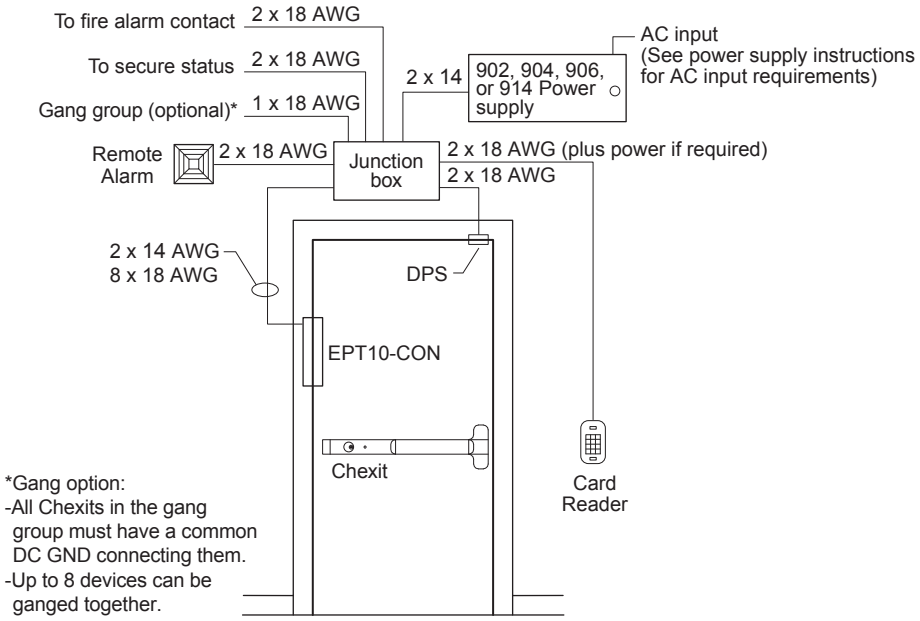

Figure 1. Riser Diagram, Single Door

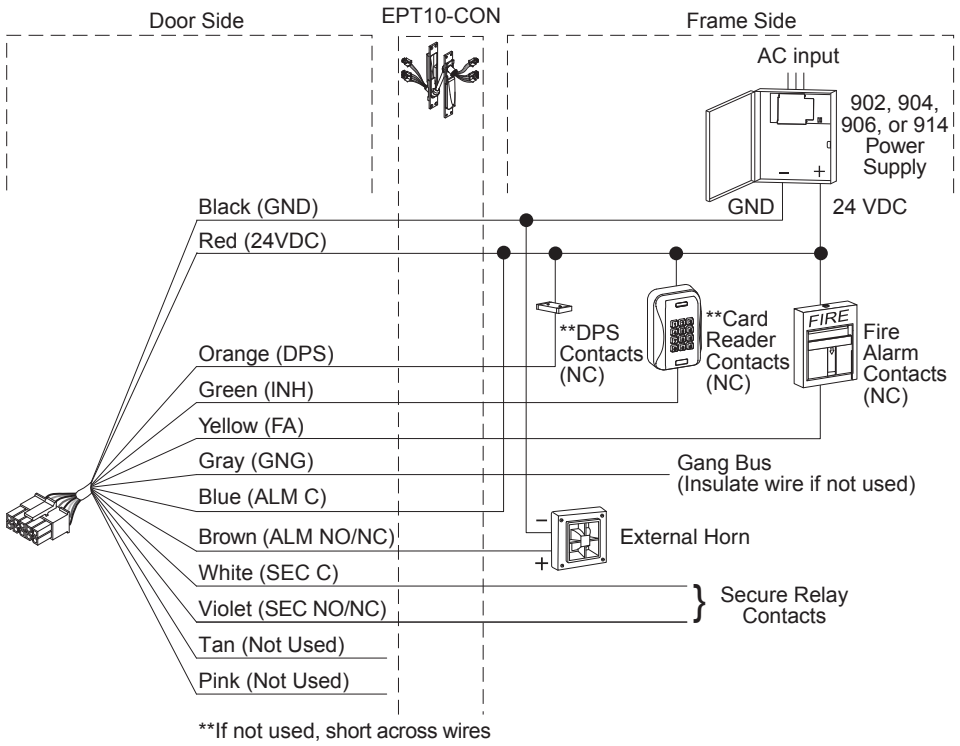

Figure 2. Point-To-Point Diagram, Single Door

4 Typical Wiring Diagrams, continued

Double Door Application - Rim/Vertical

- Both doors open in the same direction and each is equipped with a Chexit.
- The two Chexits are connected (ganged) by the gray (GNG) wires. **(If not used, insulate these wires separately.)**
- When one Chexit is set into Release Delay (activated by Push Pad), the other also goes into Release Delay and both unlock after the Release Delay.
- A fire alarm unlocks both doors immediately.
- An external inhibit device (card reader contacts) also unlocks both doors at the same time.
- After an inhibit signal from the card reader, the door that was used rearms both doors 2 seconds after closing.

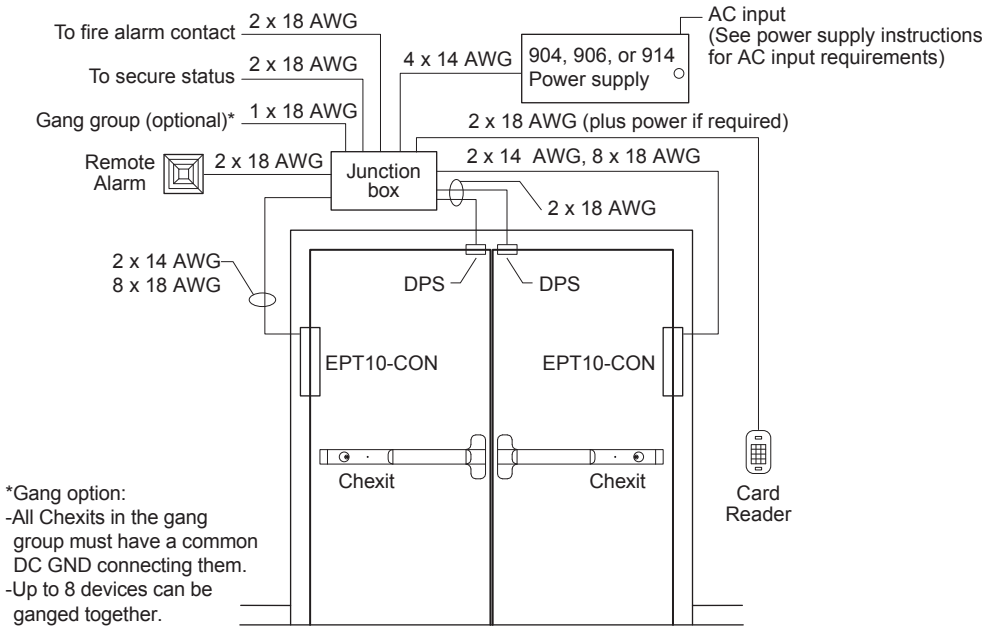

Figure 3. Riser Diagram, Double Door

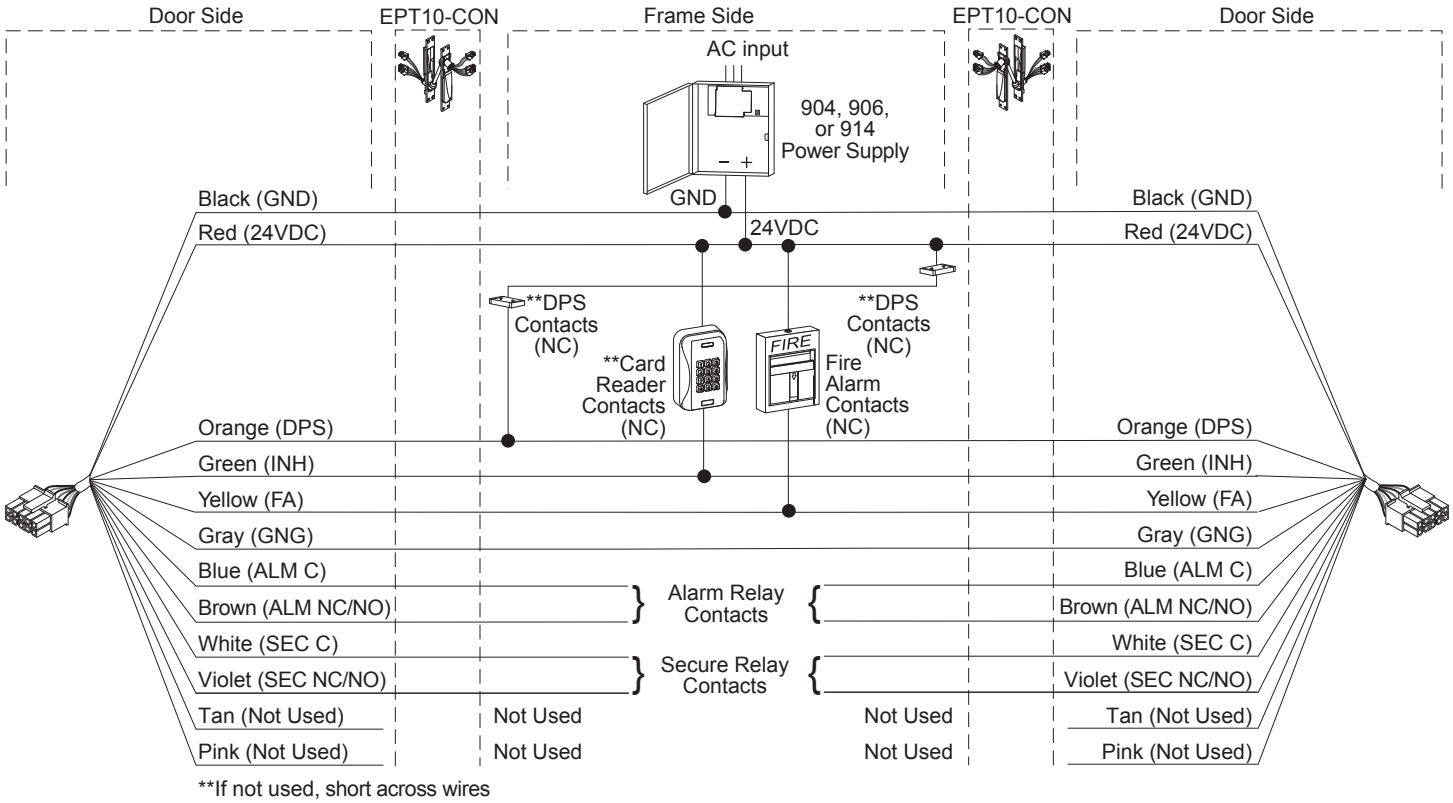

**If not used, short across wires

Figure 4. Point-To-Point Diagram, Double Door

4 Typical Wiring Diagrams, continued

Vertical - Double-Egress Doors

- Pair of doors open in opposite directions and each is equipped with a Chexit.
- The two Chexits are connected (ganged) by the gray (GNG) wires. **(If not used, insulate these wires separately.)**
- When one Chexit is set into Release Delay (activated by Push Pad), the other also goes into Release Delay and both unlock after the Release Delay.
- A fire alarm unlocks both doors at the same time immediately.
- An external inhibit device (card reader contacts) also unlocks each door individually.
- After an external inhibit, the door that was used rearms 2 seconds after closing.

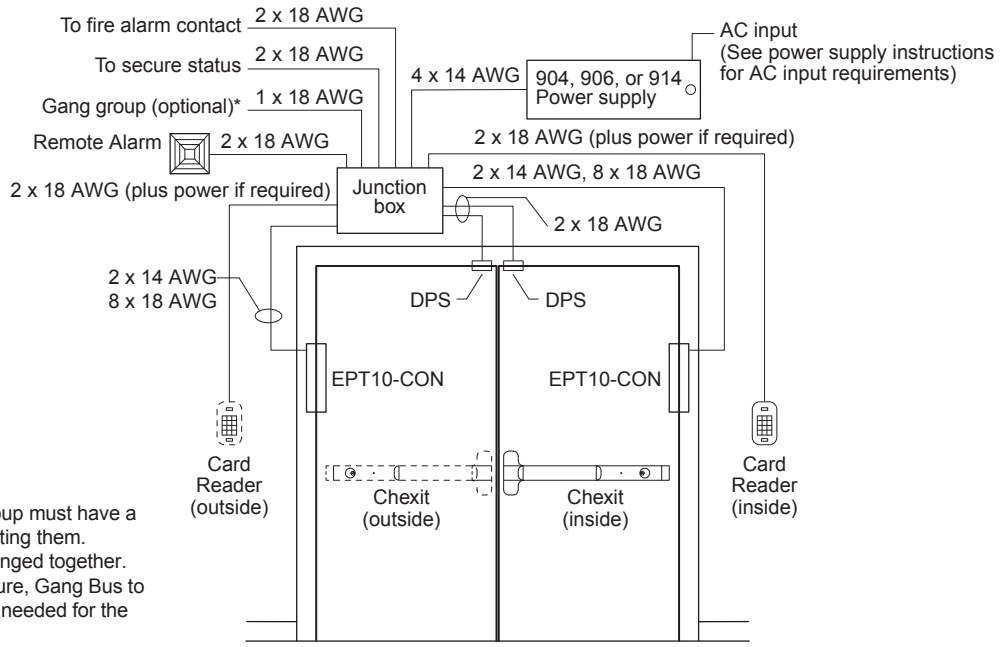

*Gang option:
- All Chexits in the gang group must have a common DC GND connecting them.
- Up to 8 devices can be ganged together.
- See section 1, Basic Feature, Gang Bus to determine if this feature is needed for the double egress application.

Figure 5. Riser Diagram, Double-Egress Doors

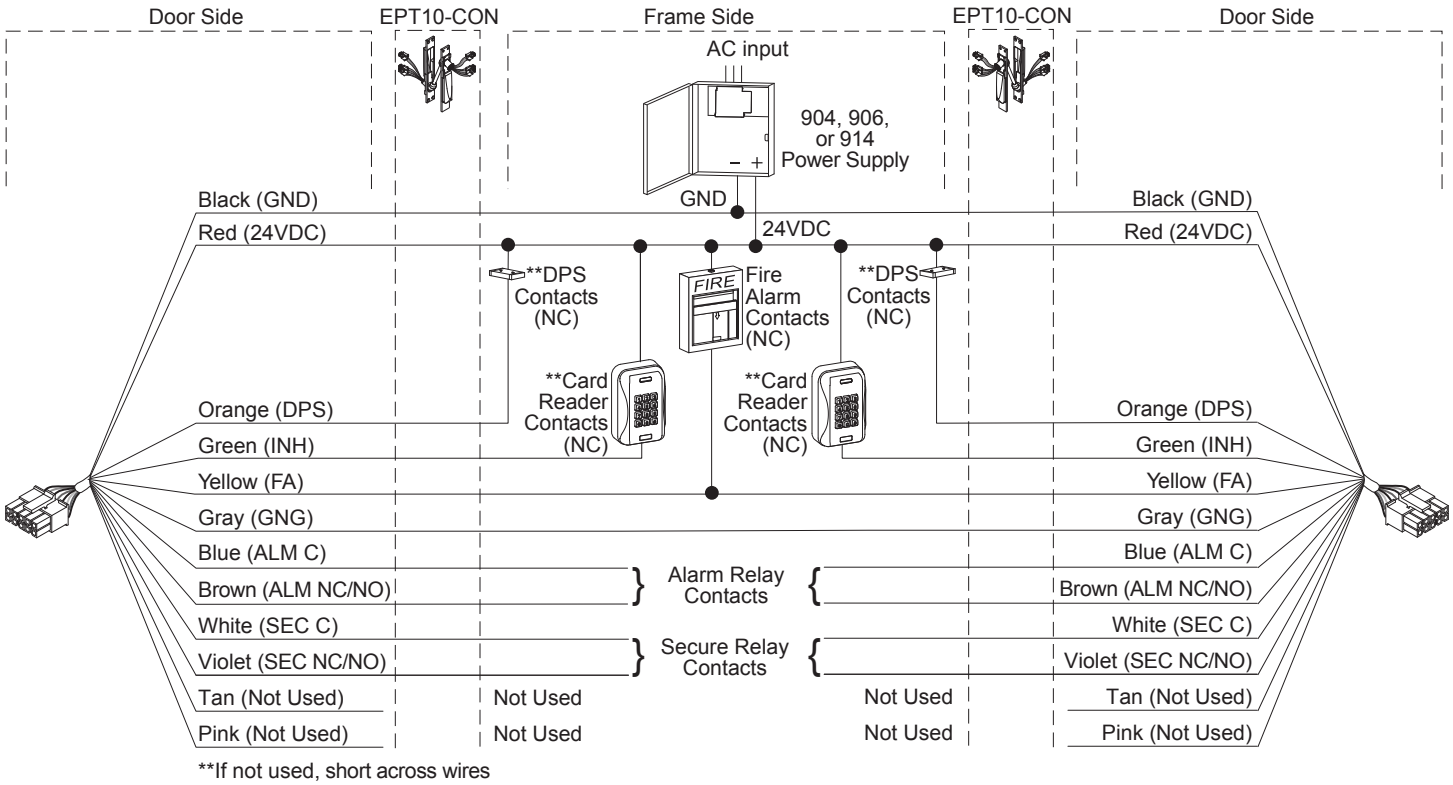

**If not used, short across wires

Figure 6. Point-To-Point Diagram, Double-Egress Doors

5 Typical Wiring Diagram for Electric Trim Function

This section describes the option of adding an electrical trim function to the Chexit installation.

5a Controlled entry application (M996L/E996L Trim-FSE shown)

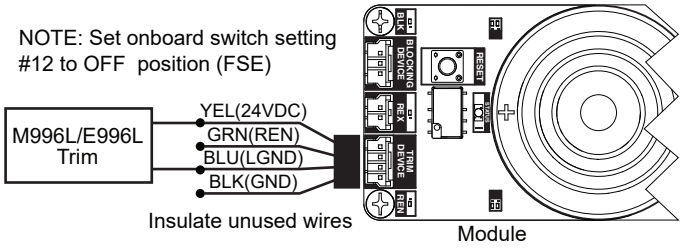

Access control to the CX (not shown) inhibits the CX and unlocks the outside FSE (Fail Secure) trim to allow entry. For access control wiring, see previous wiring diagrams.

5b Controlled entry application (E7500 Mortise Lock)

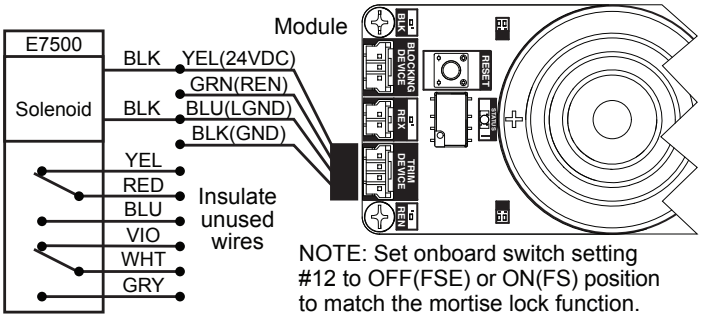

Access control to the CX (not shown) inhibits the CX and unlocks the E7500 mortise lock to allow entry. The E7500 can be either FS (Fail Safe) or FSE (Fail Secure). For access control wiring, see previous wiring diagrams.

5c Free entry application (RX996L-M + 98/99 Mortise device)

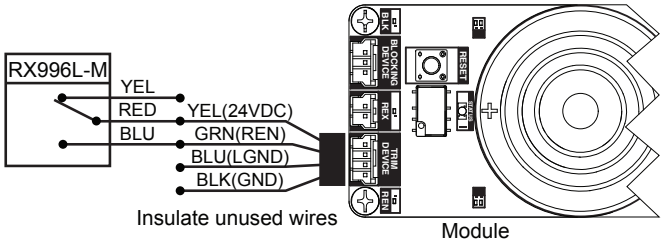

RX trim is not locked and allows entry at all times. The trim inhibits the CX using the REN function during entry. This application is only used on a CX9975 mortise device.

6 Retrofit Wiring

On the discontinued Chexit device, the Door Position Switch, Card reader and Fire Alarm contacts were tied to the white SC wire. On the new Chexit device, these contacts are wired to the red 24VDC wire (see wiring diagrams below).

⚠ CAUTION

Do not connect the gray and violet wires of the discontinued Chexit device to the gray and violet wires of the new Chexit device. The discontinued and new Chexit devices can not be ganged together.

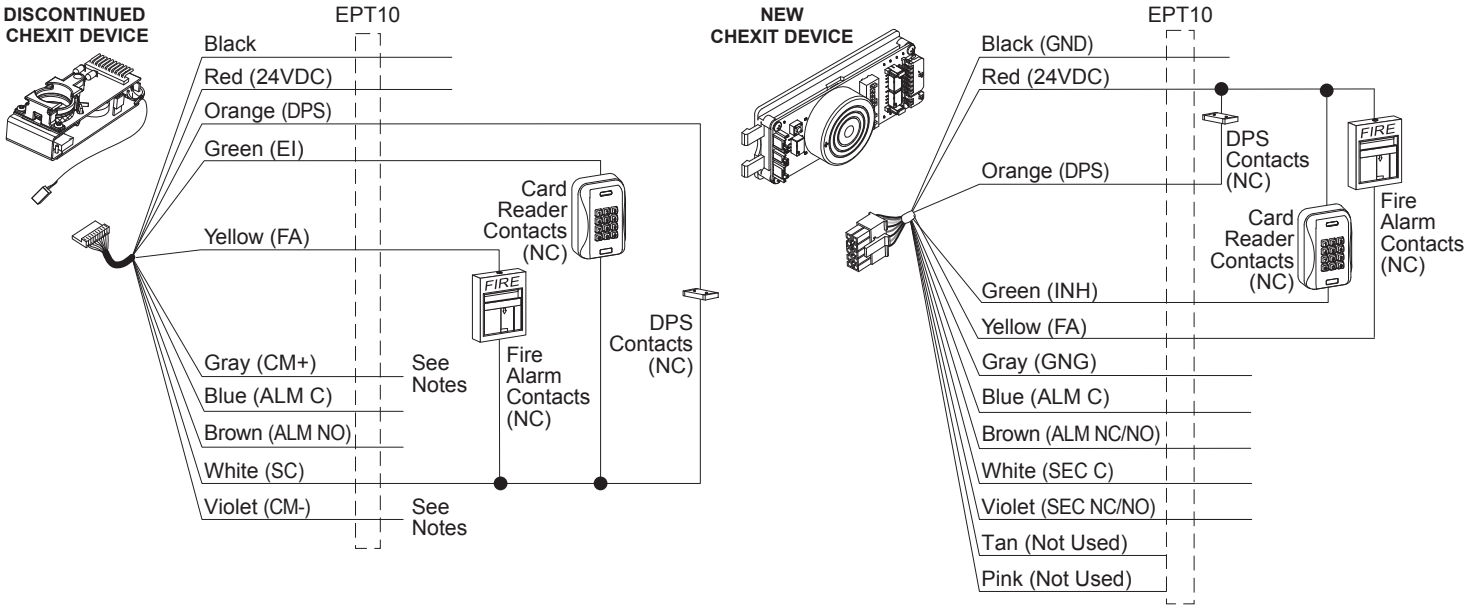

7 Installation

⚠ CAUTION
Disconnect power.

7a

To avoid risk of shock, disconnect AC power from power supply before proceeding with this installation. If using battery backup option, unplug all four wires from battery terminals.

7b If installed, remove end cap, cover plate and end cap bracket.

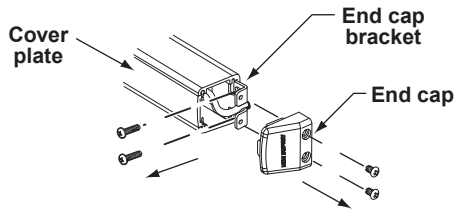

7c Drill 5/8” diameter wire access hole in surface of door.

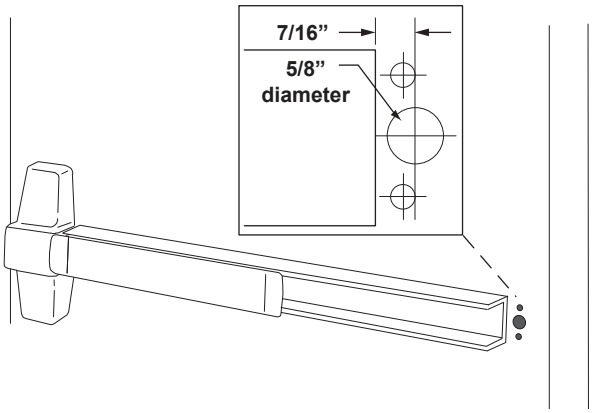

7d Route field wiring cable through hole and connect wires to EPT10 / 10-CON power transfer (see EPT instructions as needed).

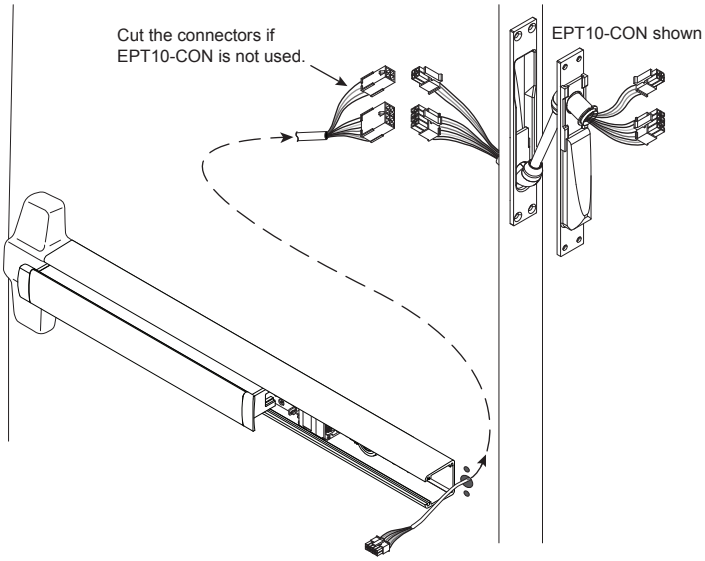

7e Slide module into exit device case as shown.

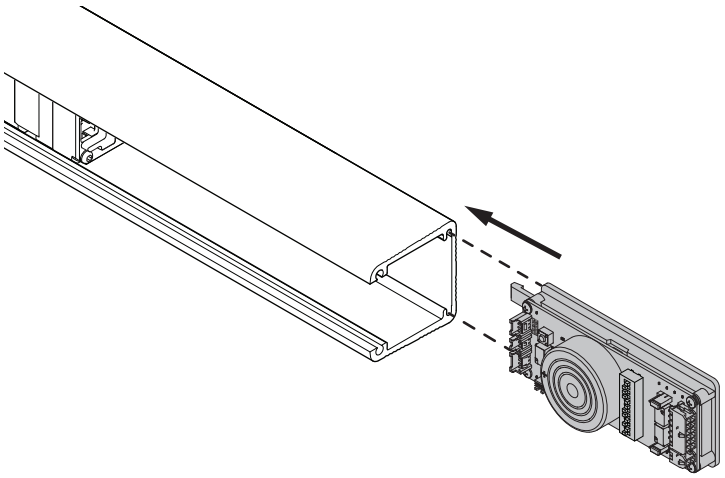

7f Install end cap bracket.

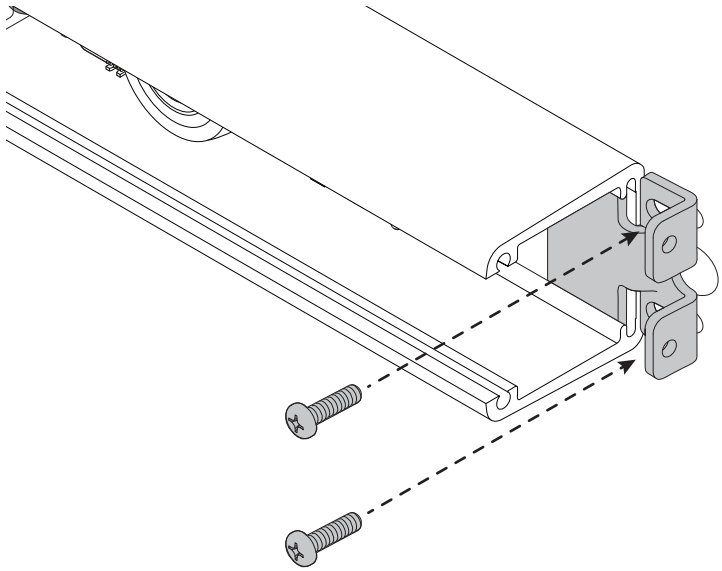

7g Connect blocking device cable to motor and to 3-pin connector on module. Connect 2-pin cable from under motor to Request-to-Exit connector labeled “REX” on module.

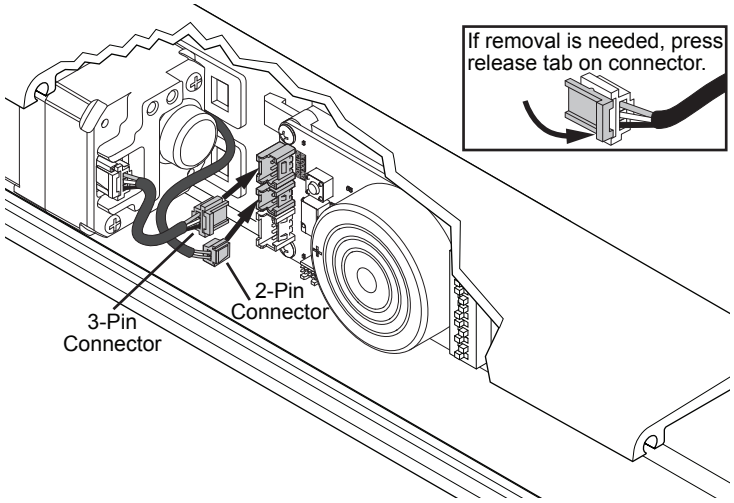

7g (cont)

ⓘ **If using electric trim (M996L/E996L/E360L-BE), install electric trim per instructions included with trim. Route trim wires through the CX device as shown.**

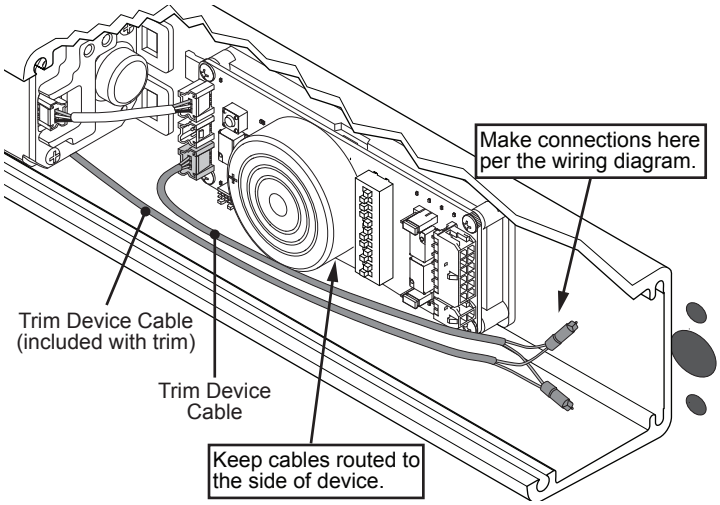

ⓘ **If using electric mortise lock (E7500 or SS7500 monitor mortise lock), install lock per instructions included with lock. Route lock wires through the door as shown.**

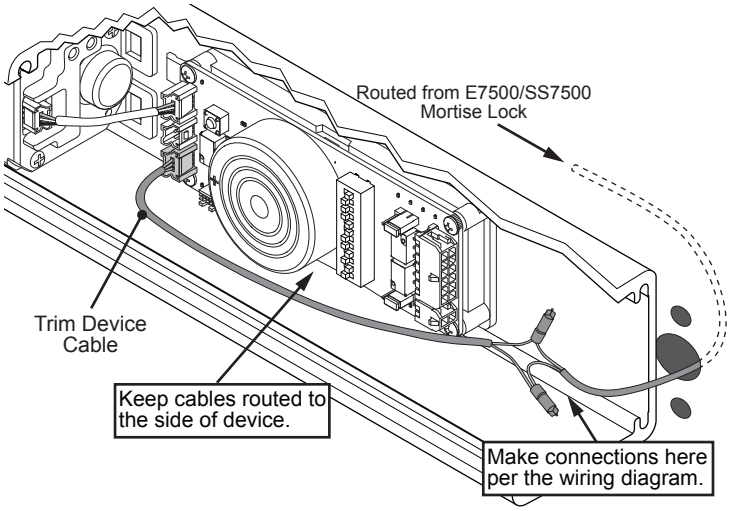

7h Refer to Section 11, Advanced Function Test table – Electric Trim for trim lock/unlock function.

7i Push toward motor until module snaps into place.

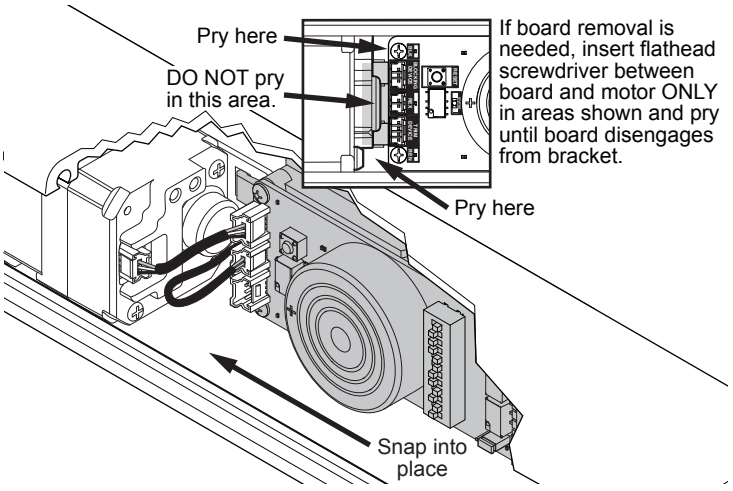

7j Use 1¼" mortise cylinder with compression ring K510-406 with straight cam and orient cam as shown. Schlage cylinder 20-001-114 recommended.

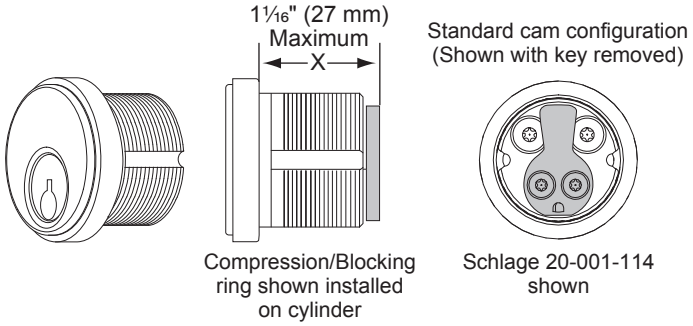

NOTICE

Dimension X as shown above must be no more than 1 1/16" or damage to product may occur.

7k Remove and discard cylinder plug from key switch assembly. Keep key switch cable routed as shown.

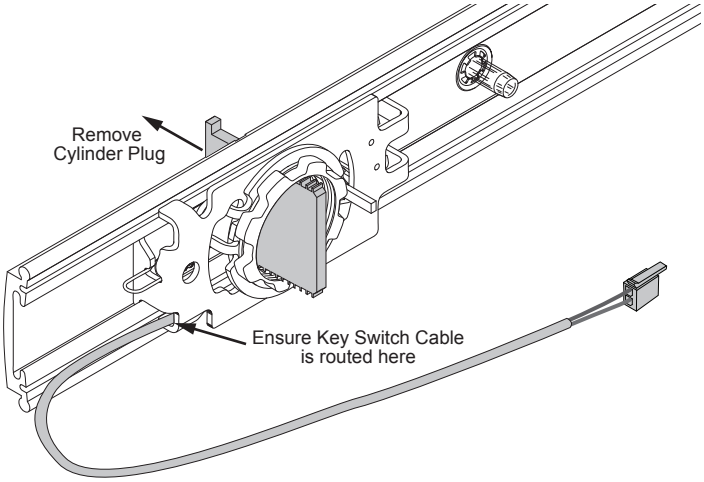

7l Install mortise cylinder. Verify cylinder cam operates key switch properly.

NOTICE

Orient cylinder as shown or unit will not operate.

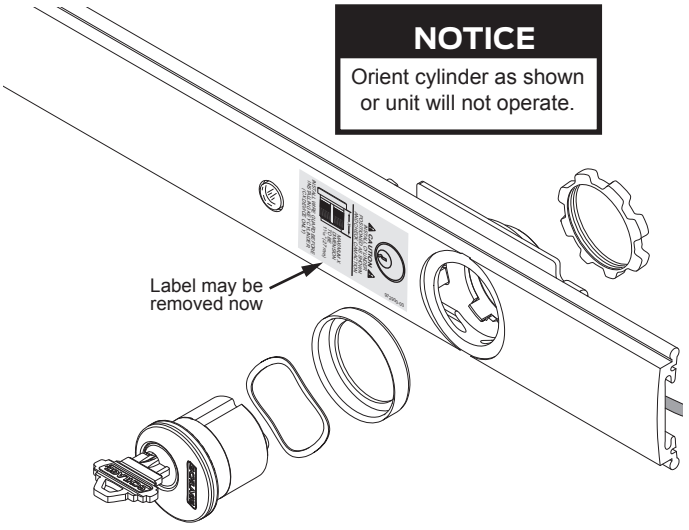

7m Connect field wiring cable and key switch cable to module as shown.

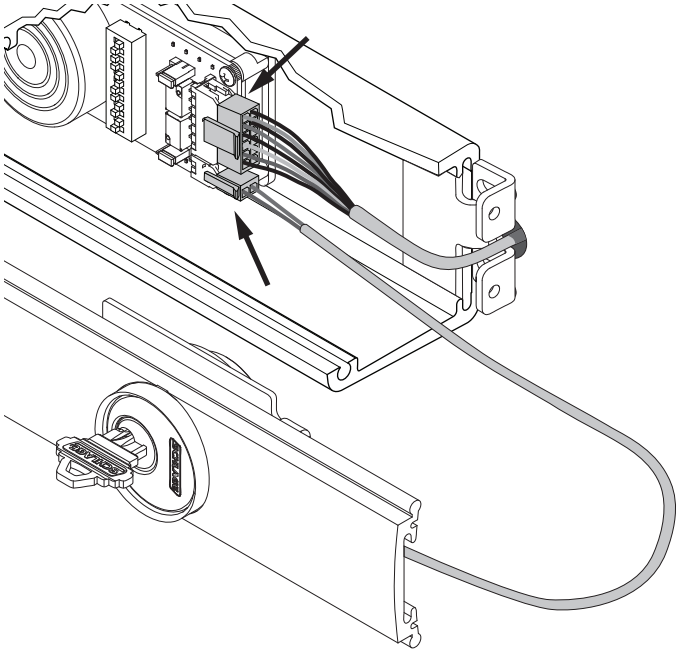

7n Slide wire guard into case end and above key switch cable until making contact with module.

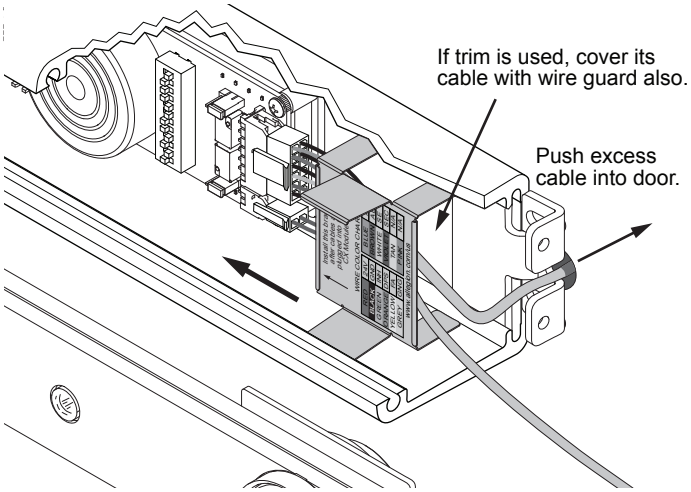

7o While keeping tension on the key switch cable and pushing wires flat against door, slide cover plate fully into place.

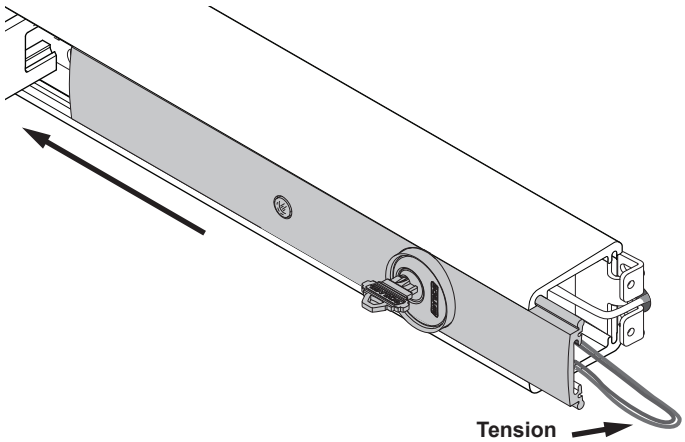

7p Place excess wire beneath wire guard.

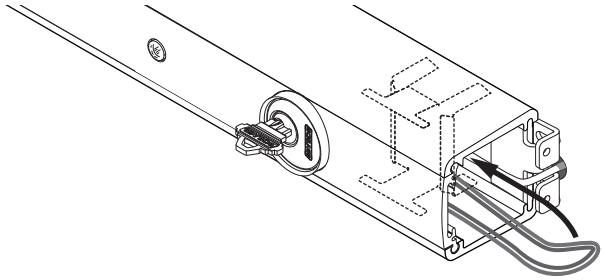

NOTICE

Verify cylinder cam moves freely and does not contact module or any wiring.

7q Complete field wiring per wiring diagrams in section 4.

7r Install end cap.

ⓘ **See pages 11 through 14 before installing end cap**

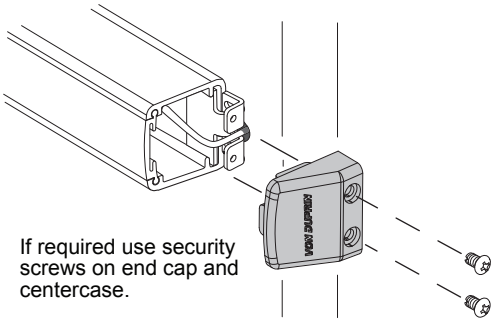

7s Remove backing from sign and put sign on door above Chexit device (sign is in cardboard tube).

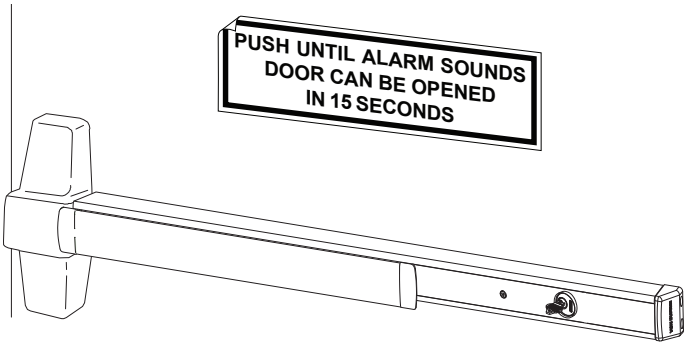

ⓘ **Locate sign per local code.**

8 Basic Functional Test

This test is to be performed with Chexit switches in default settings and with door closed. Follow the instructions below and verify that the Chexit performs as described.

Note: If at any time the Internal Alarm sounds and you wish to silence it, turn the Key Switch counter-clockwise.

Test Powerup

1. Turn the Key Switch clockwise. Then turn the power supply ON which causes the Chexit to enter **Armed Mode** (Status Indicator is flashing slow).
2. Turn the Key Switch counter-clockwise to put the Chexit into **Disarmed/Reset Mode** (Status Indicator is OFF).
3. Turn the Key Switch clockwise which causes the Chexit to enter **Rearm Delay Mode** (Status Indicator is ON for 10 seconds - this time is adjustable).
4. After **Rearm Delay Mode** expires, the Chexit will enter **Armed Mode** (Status Indicator is flashing slow).

Test Delayed Egress

5. Confirm that the Chexit is in **Armed Mode** per step 4.
6. Push the Push Pad and verify that it is locked (it will not push down).
   Chexit will immediately begin sounding the Internal Alarm and enter **Release Delay Mode** for 15 seconds (Status Indicator is flashing fast and Internal Alarm is ON).
7. After the **Release Delay Mode** expires, the Chexit will enter **Released Mode** (Status Indicator is flashing fast and the Internal Alarm is ON).
   The Push Pad will be unlocked (you can now push it down and open the door).

Mode	Push pad	Electric Trim	Status Indicator	Internal Alarm	Secure Relay	Alarm Relay
Armed	Locked	Locked	Slow Flash (2)	Off	On	Off
Rearm Delay	Unlocked	Locked	On	Off	Off	Off
Release Delay	Locked	Locked	Fast Flash (2)	On	On	On
Released	Unlocked	Off (1)	Fast Flash (2)	On	Off	On
Disarmed/Reset	Unlocked	Locked	Off	Off	Off	Off

(1) Trim will be Locked or Unlocked depending on if the Trim is Fail Secure or Fail Safe (and if the Trim Fail Safe onboard switch setting is set to OFF or ON)
(2) SLOW FLASH = 1 per second, FAST FLASH = 4 per second

9 Module Setup

9a Remove Cover Plate for access to Module as needed.

9b Set the Relay Jumpers and Onboard Switch Settings for desired device functionality.

- Position the Alarm Relay Jumper and Secure Relay Jumper to NO or NC.
- Position each Onboard Switch Setting to ON or OFF.
  - Refer to Onboard Switch Settings Table on next page for detailed description of each setting.

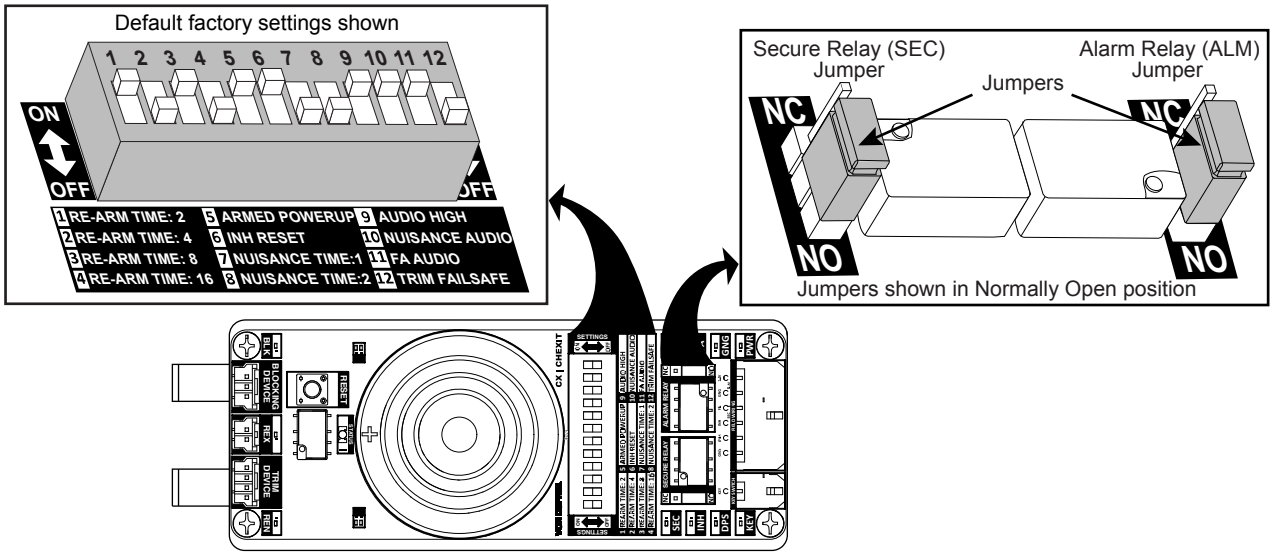

10 Onboard Switch Settings Table

Switch Numbers	Switch Position				Onboard Settings Specifications		Description
	1	2	3	4			
1-4 Rearm Time	OFF	OFF	OFF	OFF	0	Rearm Time (seconds)	The delay time initiated after the INH or KEY goes inactive (back to normal position) before the Chexit rearms, allowing a person to exit or enter without an alarm through an unlocked door.
	ON	OFF	OFF	OFF	2		
	OFF	ON	OFF	OFF	4		
	ON	ON	OFF	OFF	6		
	OFF	OFF	ON	OFF	8		
	ON*	**OFF***	**ON***	**OFF***	10		
	OFF	ON	ON	OFF	12		
	ON	ON	ON	OFF	14		
	OFF	OFF	OFF	ON	16		
	ON	OFF	OFF	ON	18		
	OFF	ON	OFF	ON	20		
	ON	ON	OFF	ON	22		
	OFF	OFF	ON	ON	24		
	ON	OFF	ON	ON	26		
	OFF	ON	ON	ON	28		
	ON	ON	ON	ON	30 (Infinite)		
5 Armed Powerup	OFF				Chexit powers up into Disarmed Powerup Mode (unlocked with alarm sounding).		If the Chexit is Armed and there is a power outage, then upon power restoration, the Chexit will either power up into Armed Mode or Disarmed Powerup Mode with alarm sounding.
	ON*				Chexit powers up into Armed Powerup Mode (locked).		
6 INH (Access Control) Reset	OFF				All alarms reset by KEY only (meaning user must be at the door to manually reset).		Selects what action is allowed to reset an alarm condition.
	ON*				All alarms reset by KEY OR INH (INH allows any access control user to reset the alarm at the door or remotely).		
7-8 Nuisance Time	7	8					The delay time the Push Pad can be pushed without starting the release sequence. It is used to prevent accidental bumps from triggering the alarm.
	OFF*	**OFF***			0	Nuisance Time (seconds)	
	ON	OFF			1		
	OFF	ON			2		
	ON	ON			3		
9 Audio High	OFF				Sets Internal Alarm to Low.		Selects between High and Low audio levels during alarm.
	ON*				Sets Internal Alarm to High.		
10 Nuisance Audio	OFF				Internal Alarm OFF during Nuisance Delay (if Nuisance Delay is enabled).		Selects whether Internal Alarm is ON or OFF during the Nuisance Delay (if Nuisance Delay is enabled).
	ON*				Internal Alarm ON during Nuisance Delay (If Nuisance Delay is enabled).		
11 FA Audio	OFF				Internal Alarm OFF during Fire Alarm.		Selects whether the Internal Alarm ON or OFF during a Fire Alarm.
	ON*				Internal Alarm ON during Fire Alarm.		
12 Trim Fail Safe	**OFF***				Trim is selected to be Fail Secure (FSE).		Matches FSE or FS trim to Chexit trim device output. See “Troubleshooting” section if trim operating incorrectly.
	ON				Trim is selected to be Fail Safe (FS).		

***Default settings**

WARNING

Consult AHJ or local building codes for onboard switch settings.

11 Advanced Function Test

Chart below shows the various Modes of the Chexit. Follow the steps below the chart to check each Mode.

Mode	Push Pad	Electric Trim	Status Indicator	Internal Alarm	Secure Relay	Alarm Relay
Armed	Locked	Locked	Slow Flash (3)	Off	On	Off
Disarmed Powerup	Unlocked	Locked	Slow Flash (3)	Slow Pulse (4)	Off	Off
Inhibited	Unlocked	Unlocked	Off	Off	Off	Off
Rearm Delay	Unlocked	Locked	On	Off	Off	Off
DPS Delay	Unlocked	Locked	On	Off	Off	Off
Nuisance Delay	Locked	Locked	Slow Flash (3)	Fast Pulse (2) (4)	On	Off
Release Delay	Locked	Locked	Fast Flash (3)	On	On	On
Released	Unlocked	Off (1)	Fast Flash (3)	On	Off	On
Tamper	Unlocked	Locked	Fast Flash (3)	Fast Pulse (4)	Off	On
Disarmed/Reset	Unlocked	Locked	Off	Off	Off	Off

(1) Electric Trim will be Locked or Unlocked based on whether the Trim Fail Safe onboard setting is set to OFF or ON
(2) Audio may be turned OFF through Nuisance Audio onboard switch setting
(3) SLOW FLASH = 1 per second, FAST FLASH = 4 per second
(4) SLOW PULSE = 1 per second, FAST PULSE = 4 per second

Test Powerup

1. Ensure that the Key Switch is turned clockwise. Turn the Power Supply ON.
   -If the Armed Powerup onboard switch setting is ON (default) the Chexit will enter **Armed Mode**.
   -Note: If the Armed Powerup onboard switch setting is OFF the Chexit will enter **Disarmed Powerup Mode**.
2. Turn the Key Switch counter-clockwise to put the Chexit into **Disarmed/Reset Mode**.
3. Turn the Key Switch clockwise to arm the Chexit.
   -If the Rearm Time onboard switch setting is ON (default = 10 seconds), the Chexit will enter **Rearm Delay Mode**.
   After **Rearm Delay Mode** expires, the Chexit will enter **Armed Mode**.
   -If the Rearm Time onboard switch setting is OFF, the Chexit will enter **Armed Mode** without a delay.

Test Delayed Egress

4. Confirm that the Chexit is in **Armed Mode**.
5. Push and hold the Push Pad.
   -If the Nuisance Time onboard switch setting is OFF, the Chexit will immediately enter **Release Delay Mode**.
   -The Chexit will release in 15 seconds.
   -If the Nuisance Time onboard switch setting is ON, the Chexit will enter **Nuisance Delay Mode**.
   -If the Nuisance Audio onboard switch setting is ON, the Internal Alarm will pulse fast.
   -If the Nuisance Audio onboard switch setting is OFF, the Internal Alarm will not sound.
   -If the Push Pad is released before the Nuisance Delay expires, the Chexit will go back to **Armed Mode**.
   -If the Push Pad is held until the Nuisance Time expires, the Chexit will enter **Release Delay Mode**.
   After the Release Time expires, the Chexit will enter **Released Mode**.
   The Chexit will release in 15 seconds, less the Nuisance Time already elapsed.
6. Repeat Step 2 and Step 3 to make the Chexit return to **Armed Mode**.

Test Access Control

7. Confirm that the Chexit is in **Armed Mode**.
8. Activate the Inhibit (INH) Input to make the Chexit enter **Inhibited Mode**.
9. Release the Inhibit (INH) Input.
   -If the Rearm Time onboard switch setting is ON (default = 10 seconds), the Chexit will enter **Rearm Delay Mode**.
   -If the door is opened and closed before the Rearm Time expires, the Chexit will enter **DPS Delay Mode.**
   The Chexit will enter **Armed Mode** in 2 seconds.
   -If the door is left open and the Rearm Time expires, the Chexit will enter **Released Mode**.
   -If the Rearm Time onboard switch setting is OFF.
   -If the door is closed, the Chexit will go back to **Armed Mode**.
   -If the door is left open the Chexit will enter **Tamper Mode**.

Test Fire Alarm

10. Confirm that the Chexit is in **Armed Mode**.
11. Activate the FA input to make the Chexit enter **Released Mode**.
    -If the FA Audio onboard switch setting is ON, the Internal Alarm will sound.
    -If the FA Audio onboard switch setting is OFF, the Internal Alarm will not sound.
12. Repeat Step 2 and Step 3 to make the Chexit return to **Armed Mode**.

12 Onboard Indicators

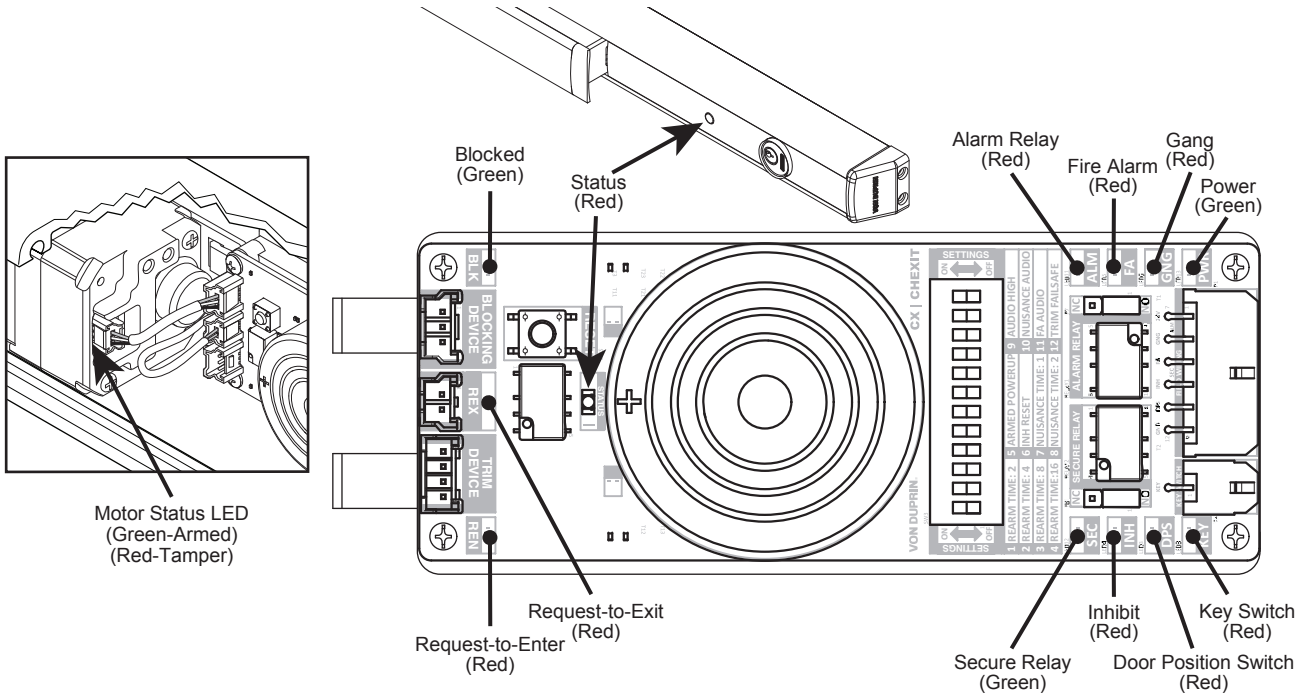

Signal	Indication	Description
PWR	OFF	Power is OFF
	ON	Power is ON
KEY	OFF	Key Switch turned clockwise (Arm)
	ON	Key Switch turned counter-clockwise (Disarm/Reset)
GNG	OFF	No Gang signal (Inactive)
	ON	Gang signal (Active)
FA	OFF	Fire Alarm contacts closed (Inactive)
	ON	Fire Alarm contacts open (Active)
DPS	OFF	Door Position Switch closed (Door Closed)
	ON	Door Position Switch open (Door Open)
INH	OFF	Inhibit contacts closed (Inactive)
	ON	Inhibit contacts open (Active)
SEC	OFF	Chexit not secure (Relay contact state depends on Secure Relay NO/NC jumper setting)
	ON	Chexit secure
ALM	OFF	Chexit not in alarm (Relay contact state depends on Alarm Relay NO/NC jumper setting)
	ON	Chexit in alarm condition
BLK	OFF	Push Pad is unlocked
	ON	Push Pad is locked
REX	OFF	Push Pad is not pushed (Inactive)
	ON	Push Pad is pushed (Active)
REN	OFF	Request-to-Enter contacts open (Inactive)
	ON	Request-to-Enter contacts closed (Active)
STATUS	OFF	Chexit is in Disarmed/Reset Mode or in Inhibited Mode
	SLOW FLASH	Chexit is in Armed Mode or in Disarmed Powerup Mode
	FAST FLASH	Chexit is in Release Delay Mode or Released Mode
	ON	Chexit is in Rearm Delay Mode or DPS Delay Mode
MOTOR STATUS	OFF	Push pad is not blocked/unlocked
	GREEN	Push pad is blocked/locked
	SLOW FLASH RED	Overvoltage

13 Troubleshooting

Normal Chexit operation:

-After turning the Key Switch clockwise to Arm, the Chexit will wait the selected Rearm Time (red Status Indicator is ON).
-At the end of this delay, the Chexit will lock the Push Pad (red Status Indicator is flashing slow) indicating the Chexit is Armed.
-To trigger delayed egress, push the Push Pad in. The Chexit will sound an Internal Alarm (red Status Indicator is flashing fast).
-At the end of the Release Delay, the Push Pad will unlock allowing exit. The Internal Alarm will continue until the Chexit is reset with the Key Switch or Inhibit Input (if INH Reset onboard switch setting is ON).

Most wiring issues can be diagnosed by observing the Module's onboard LED indicators (see section 12, Onboard Indicators).

An Armed Chexit's LED's should appear as:

Status LED - flashing slow
PWR, SEC and BLK - ON (PWR LED is on when power is applied to the Module and is independent of any switch positions)
All other LED's - OFF

Status Indicator flashing fast or **Internal Alarm pulsing fast** is 4 times per second. **Status Indicator flashing slow** or **Internal Alarm pulsing slow** is 1 time per second. **Status Indicator ON** or **Internal Alarm ON** means on continuously.

With 24VDC applied to the Chexit, turn the Key Switch clockwise to Arm and note the possible symptoms below.

Symptoms		Possible Cause	Solution
Push Pad is NOT locked. Internal Alarm is NOT sounding.	Module PWR (Power) LED is OFF.	Power supply is not supplying any voltage.	Check power supply output voltage at the supply and at the Chexit.
		Power supply voltage is too low.	Check power supply output voltage is 24VDC.
		Field wiring connection is broken.	Verify the power wiring has continuity from power supply to the Module.
		Power supply is reverse polarity.	Verify proper color code is used to supply power to Chexit (see section 4, point-to-point diagrams).
	Module Status Indicator is ON.	Rearm Delay is active.	Verify proper rearm delay setting (see section 9 and 10, switches 1-4). If set to 30 see section 1, "Rearm Delay".
	Module Status Indicator flashes once.	INH (access control) wiring/ connection is open.	Verify the INH wiring continuity.
		INH (access control) is active (contacts open).	Verify the access control device is using normally closed contacts (see section 4, point-to-point diagrams).
Push Pad is NOT locked. Internal Alarm is ON.	Module Status Indicator is flashing fast. Module FA (Fire Alarm) LED is ON. Module ALM (Alarm) LED is ON.	FA wiring/connection is open.	Verify the FA wiring has continuity from FA contacts to Module.
		FA is active (contacts open).	Verify the FA contacts are closed when there is no fire alarm.
	Module Status Indicator is flashing fast. Module GNG (Gang) LED is ON. Module ALM (Alarm) LED is ON.	GNG wire is shorted to the power supply ground.	Find and remove short. Insulate any unused GNG wire.

13 Troubleshooting, continued

Symptoms		Possible Cause	Solution
When Arming, Release Delay starts immediately. Push Pad is first Locked and then releases after 15 seconds. Internal Alarm is ON.	Module Status Indicator is flashing fast. Module REX (Req. to EXIT) LED is ON. Module ALM (Alarm) LED is ON.	Push Pad is not returning to the full extended position.	Pull Push Pad out fully and verify this corrected the problem. Check for dirt and rubbing around the Push Pad area. Check for full latch bolt extension (see section 12, REX LED indication).
		REX cable is disconnected	Plug in REX cable (see section 7, step 7g)
		REX wiring/connector is defective.	Check for broken wiring from the REX connector to the REX switch under the Push Pad.
		REX switch is defective.	Verify the REX switch is closed when the Push Pad is fully extended. If still open, replace switch.
When Arming, Push Pad remains unlocked. Internal Alarm is pulsing fast	Module Status Indicator is flashing fast. Module DPS (Door Pos. Switch) LED is ON. Module ALM (Alarm) LED is ON.	DPS switch contact is open.	Close the door, if open. Verify the DPS contacts are closed when the door is closed.
		DPS wiring/connection is open.	With door closed, verify the DPS wiring has continuity from DPS contacts to Module.
When Arming, Push Pad remains unlocked. Internal alarm is pulsing fast after 2 seconds.	Module Status Indicator is flashing fast after 2 seconds. Module BLK (Blocking) LED is OFF. Motor Status LED is OFF. Module ALM (Alarm) LED is ON.	CX motor cable is disconnected.	Plug in CX motor cable (see section 7, step 7g).
		CX motor wiring/connection is open.	Check for broken wiring in the motor cable.
		CX motor assembly is defective.	Call customer service.
		On a rim or vertical rod device, the latch bolt can't extend.	Door is not closed enough for proper latching. Make necessary mechanical adjustments to latch properly. If using a vertical rod device and arming with door open, the latch bolts are held retracted.
		On any device, the Push Pad is held in.	Verify the Push Pad is extending fully (see REX) above
After a power outage and power is restored, Push Pad remains unlocked (Key Switch is in Armed position - clockwise). Internal Alarm is pulsing slow.	Module Status Indicator is flashing slow. Module ALM (Alarm) LED is ON.	The Chexit is not self arming after a power outage. Chexit onboard switch #5 (Armed Power Up) is set to OFF.	Some jurisdictions require the Chexit to be disarmed and alarming to be manually reset only after a power loss. For those jurisdictions, the Module switch #5 is set to OFF (see section 9 and 10, switch 5).
Trim is locked when it should be unlocked. OR Trim is unlocked when it should be locked.		Trim switch setting is incorrect. Incorrect trim type. Verify if FS (Fail Safe) or FSE (Fail Secure) is being used.	Select the correct trim switch setting to match the trim being used (see section 9 and 10, switch 12). Install the correct trim type.
M996L trim not operating as Fail Secure (FSE).		M996L shipped Fail Safe by default. Trim must be set to Fail Secure.	1. Set Chexit switch 12 to OFF (Step 9). 2. Set switch on M996L to FSE. 3. With Chexit armed, toggle INH input with valid credential. 4. Test trim. If trim didn't change to FSE, repeat Step 3.