centrios

Scan the QR code and follow along with our installation video

Installing your Smart Reader

Thank you for purchasing the Smart Reader, part of the Centrios™ access management family of products. The universal reader, with relays, is designed to help businesses like yours simplify how they manage who can access what and when.

PLEASE NOTE: This is a more technically advanced piece of hardware. It does not have to be installed by a professional, but you will need to be familiar with wiring diagrams, splicing, and tapping into electrical wires, and potentially cutting into your door frame. If this does not sound like something you feel comfortable with, or frankly don't have time for, we're happy to connect you with one of our skilled partners. Go to Centrios.com/install-support.

Before you get started, please **download the Centrios app from the Google Play store or Apple App store. Also review the Preinstall Checklist on www.centrios.com**.

Centrios

Downloading the Centrios app first will ensure your mobile phone is compatible with the app and allow you to create your account, so you are ready to enroll your Centrios product.

The preinstall checklist will ensure you have properly surveyed the site and have the appropriate tools, materials, and hardware for a successful installation.

What's in the box

Take a minute to make sure you've got everything shown below. Make sure you keep the barcode that is adhered to the front of the Reader, you will need it to enroll your device later during installation.



Reader Front

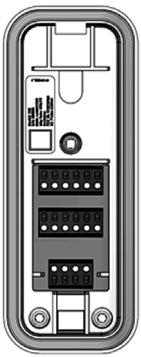
Reader Rear

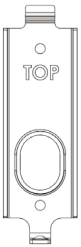

Mounting Bracket


(2) 6-32x1/2" Pan Head Screws


M2.5x0.45x 10mm Torx Screw


T8 Torx Tamper Bit

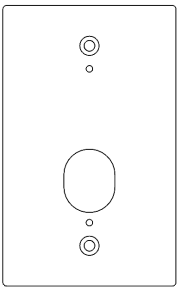
Trim Plate w/ Gasket for single gang junction box


(2) 6-32x3/8" Flat Head Screws


(2) 6-32x3/4" Flat Head Screws


(2) 6-32x1/4" Pan Head Screws

centrios

Specifications and Requirements for the Centrios Reader

Power Supply	12 - 24 VDC
Operating Temperture	-40F to 122F (-40C to 50C)
Storage Temperture	-40F to 185F (-40C to 85C)
Relative Humidity	90 +0/-5 %RH @ 86F +/-5F
IP Class	Tested to IP65
Relays	2
Relay Switching Capacity	30VDC / 2A - 60W Max
DPS	1 N.O./N.C., configurable via mobile app
REX	1 N.O./N.C., configurable via mobile app
Tamper	1 SPST, N.O. Internal
Capacitive Touch Keypad	Digits, 0-9, Action Button
Network (Future State)	2.4Ghz, Zigbee 3.0
Bluetooth L.E. Reader	Bluetooth 5.0

1 Power supply preparation

Your Reader requires a hardwired low-voltage power supply. We recommend using a power supply that is specifically for your Centrios access system. You can install the power supply box in a variety of locations, just make sure it is easily accessible and within 200 feet of the Reader. We recommend that you use a minimum wire size of 18AWG for the wire-run from the power supply to the Reader.

2 Choosing your reader location

The Reader should be surface mounted on a door, door frame (aluminum, other metal or wood) or on the wall next to it. Route the 18AWG wire to this location from your low-voltage power supply box.

3 Install the mounting bracket

Once you have determined where you want to mount the reader, do the following:

Use the mounting bracket as a template to mark both 1/8" holes and a single 3/4" hole. Ensure the mounting bracket is level to the frame or wall and then mark the holes.

Drill out two (2) 1/8" holes and one (1) 3/4" hole where you made the marks.

Route the wires through the 3/4" hole and wire clearance hole in the mounting bracket.

Attach the mounting bracket using the two (2) 6-32 x 1/2" self-tapping screws. If you are mounting on a non-metal door frame or wall, you will want to use dry wall screws and anchors, or something similar.

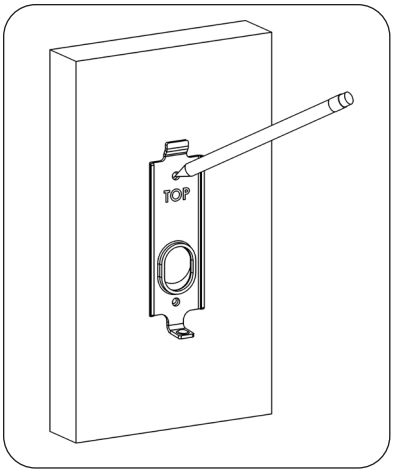

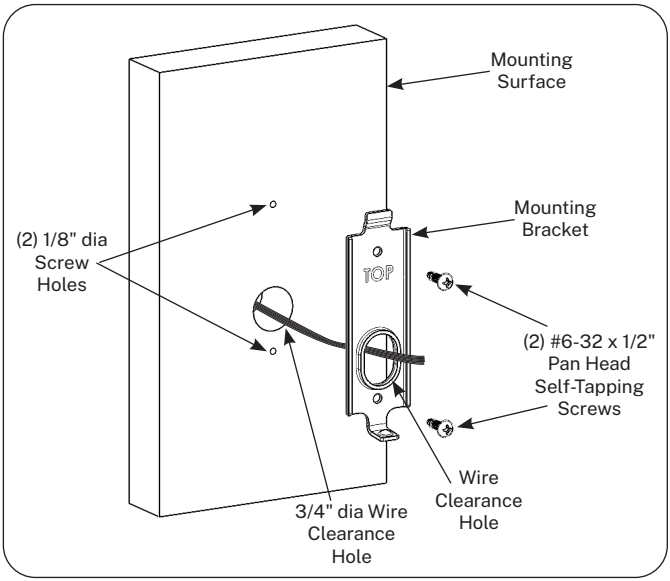

centrios

Optional wall plate junction box (J-Box) installation

If you are installing the reader on a wall using a junction box, do the following:

- Route the wires through the single gang J-Box and then through the provided trim plate.
- Install the trim plate by securing it to the J-Box with two (2) 6-32 x 3/8" or 3/4" self-tapping screws.
- Route the wires through the wire clearance hole in the reader mounting bracket.
- Install the mounting bracket by securing it to the trim plate using two (2) 6-32 x 1/4" self-tapping screws.

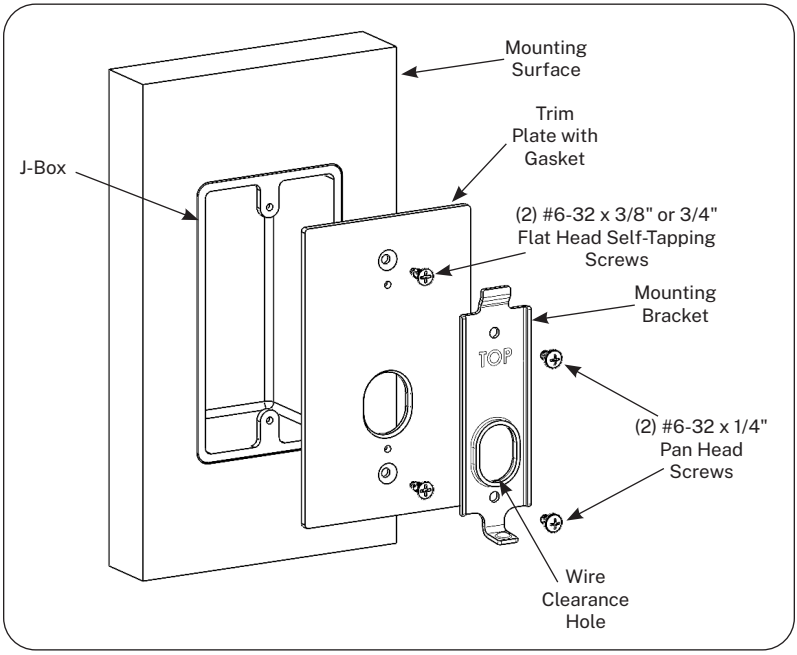

centrios

4 Wiring the Reader

For additional support during installation, we've added full-color wiring diagrams and videos to our website. Use the QR code on the next page or go to www.centrios.com.

Make the wire connections to the appropriate wire terminal on each pluggable terminal block according to the wiring diagram that meets your installation scenario (2 x 6-pin, 1 x 4-pin). See the diagram for relay board termination points.

DO NOT mount the reader housing until the wiring is complete!

Install pluggable terminal blocks onto relay secure board on the back of the Reader.

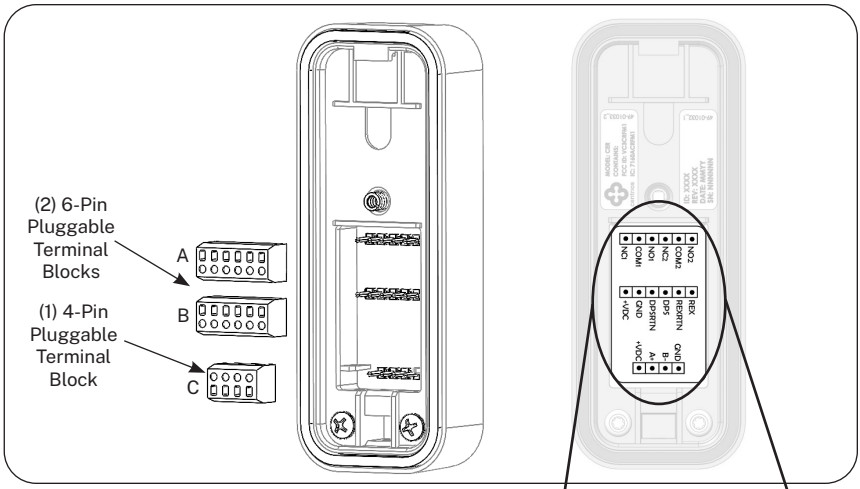

Terminal Block A

Name	Description	Voltage Level (max)
NC1	Relay 1, Normally-Closed	30VDC, 2A, 60W
COM1	Relay 1, Common	
NO1	Relay 1, Normally-Open	
NC2	Relay 2, Normally-Closed	
COM2	Relay 2, Common	
NO2	Relay 2, Normally-Open	

Terminal Block B

Name	Description	Voltage Level (max)
+VDC	Power Supply Input	12-24VDC
GND	Connect to Power Supply ground	Power/Ground return
DPS RTN	Door Position Switch contact return	3.3VDC MAX
DPS	Door Position Switch	3.3VDC MAX
REX RTN	Request to Exit contact return	3.3VDC MAX
REX	Request to Exit	3.3VDC MAX

Terminal Block C

Name	Description	Voltage Level (max)
+VDC	Alternate Power Supply Input	12-24 VDC
A+	RS485 Data A	+-15VDC
B-	RS485 Data B	+-15VDC
GND	Alternate Ground	Power Ground/Return

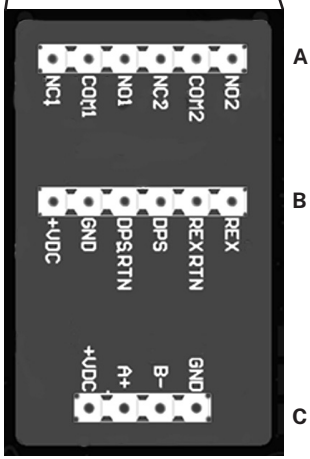

centrios

Wiring Diagrams

For more detailed drawings, please visit www.centrios.com or use the QR code.

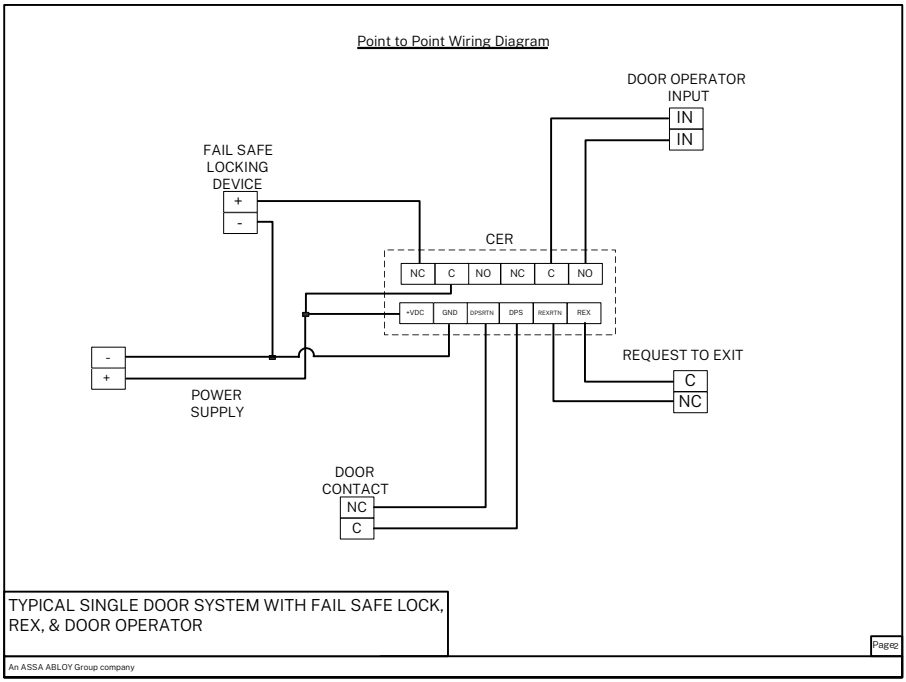

Point to Point Wiring Diagram

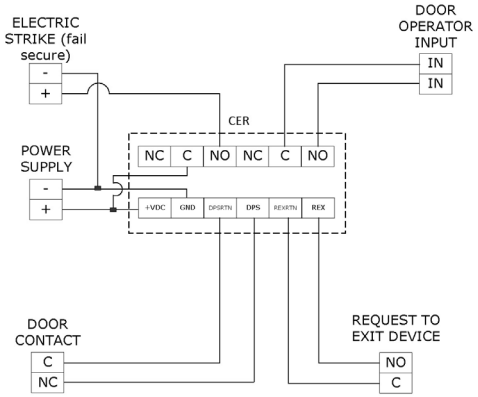

TYPICAL SINGLE DOOR SYSTEM WITH FAIL-SECURE ELECTRIC STRIKE & DOOR OPERATOR

ALWAYS READ AND REVIEW PRODUCT INSTALLATION INSTRUCTIONS BEFORE MAKING ANY ELECTRICAL CONNECTIONS

An ASSA ABLOY Group company

ASSA ABLOY

Point to Point Wiring Diagram

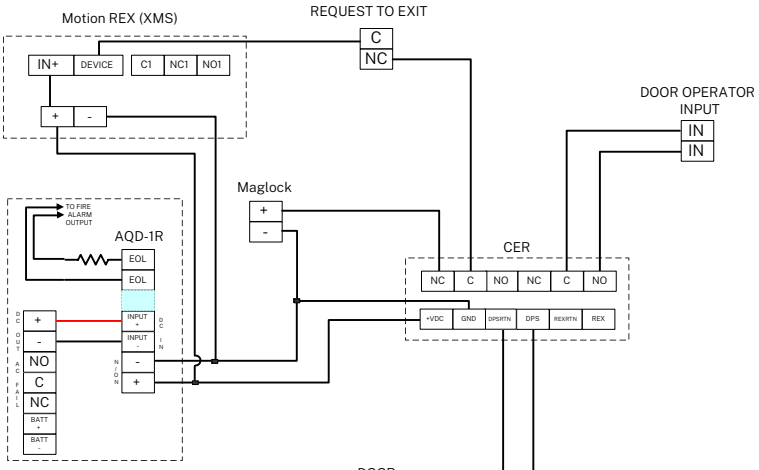

TYPICAL SINGLE DOOR SYSTEM WITH MAGLOCK, MOTION, REX, & DOOR OPERATOR

Page2

An ASSA ABLOY Group company

centrios

5 Attach the reader to the mounting bracket

Hook the reader housing onto the top of the mounting bracket and slide the reader housing downward until the reader housing is fully seated onto the bracket and against the mounting surface. Downward and angular pressure into the mounting surface is needed to compress the gasket and fully seat the reader housing to the mounting bracket.

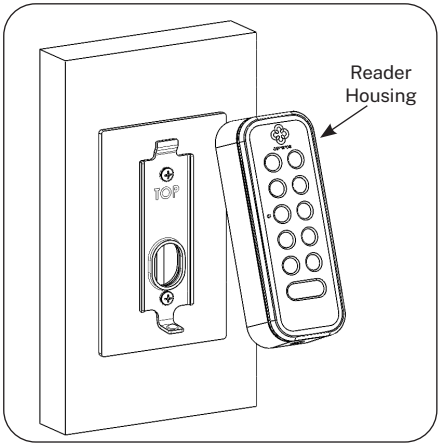

Next, install the provided M2.5x0.45x10mm flat head Torx screw to the hole in the base of the reader housing to secure it to the mounting bracket. DO NOT overtighten the screw.

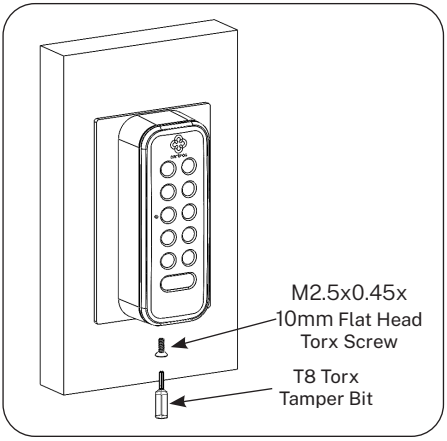

6 Enrolling the Device

Now that you have the Reader installed, the last step is to enroll the device into the Centrios app. Scan the QR code on the front of the Reader to start the enrollment process. Follow the prompts. If you have any issues, please go to www.centrios.com or call Technical Support for assistance.



We're all done

That's it, you're good to go.

Don't forget, we're here to help if you need it. Simply call us at 888-425-1001, email us at support@centrios.com, or check out our support pages at centrios.com.

Thanks again for choosing Centrios for your business.

7 Maintenance

Factory Reset:

If a factory reset is necessary, do the following:

Remove the reader from the mounting bracket by removing the M2.5x0.45x10mm Flat Head Torx screw and lifting the reader housing by pulling the bottom out and then lifting up off the top hook.

On the back of the reader, either remove the terminal block with the power connection or remove one of the power wires from the terminal block to de-power the reader.

Reconnect the terminal block/power wires and press the Tamper button 10 times within the first 10 seconds of powering up.

The reader LED displays flashing patterns indicating it's resetting and reboot a few times.

Once the reader has completed the reset/reboot process, re-attach the reader to the mounting bracket (see step 5).

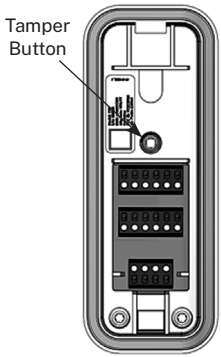

NOTE:

All components and/or modules provided in the Reader are only authorized for use within Reader. Removal, disassembly, etc. could void and/or invalidate legal use within the United States.

centrios

Warnings

Changes or modifications to this device not expressly approved by ASSA ABLOY could void the user's authority to operate the equipment.

FCC: Contains FCC ID VC3CRFM1

This equipment has been tested and found to comply with the limits for a Class B digital device, pursuant to Part 15 of the FCC Rules. These limits are designed to provide reasonable protection against harmful interference in a residential installation. This equipment generates, uses, and can radiate radio frequency energy and, if not installed and used in accordance with the instructions, may cause harmful interference to radio communications. However, there is no guarantee that interference will not occur in a particular installation. If this equipment does cause harmful interference to radio or television reception, which can be determined by turning the equipment off and on, the user is encouraged to try to correct the interference by one or more of the following measures:

- Reorient or relocate the receiving antenna.
- Increase the separation between the equipment and receiver.
- Connect the equipment into an outlet on a circuit different from that to which the receiver is connected.
- Consult the dealer or an experienced radio/TV technician for help.

Industry Canada: Contains IC ID 7160ACRFM1

Under Industry Canada regulations, this radio transmitter may only operate using an antenna of a type and maximum (or lesser) gain approved for the transmitter by Industry Canada. To reduce potential radio interference to other users, the antenna type and its gain should be so chosen that the equivalent isotropically radiated power (e.i.r.p.) is not more than that necessary for successful communication.

Conformément à la réglementation d'Industrie Canada, le présent émetteur radio peut fonctionner avec une antenne d'un type et d'un gain maximal (ou inférieur) approuvé pour l'émetteur par Industrie Canada. Dans le but de réduire les risques de brouillage radioélectrique à l'intention des autres utilisateurs, il faut choisir le type d'antenne et son gain de sorte que la puissance isotrope rayonnée équivalente (p.i.r.e.) ne dépasse pas l'intensité nécessaire à l'établissement d'une communication satisfaisante.

General Regulatory Compliance:

This device contains license-exempt transmitter(s)/receiver(s) that comply with Innovation, Science and Economic Development Canada's license-exempt RSS(s). This device complies with part 15 of the FCC Rules. Operation is subject to the following two conditions: (1) this device may not cause harmful interference, and (2) this device must accept any interference received, including interference that may cause undesired operation.

Cet appareil contient des émetteurs/réceptuers exemptés de licence conformes aux RSS d'Innovation, Sciences et Développment économique Canada. Cet appareil est conforme à la section 15 de la réglementation de la FCC.

L'opération est sujette aux deux conditions suivantes: (1) ce dispositif peut ne pas causer l'interférence nocive, et (2) ce dispositif doit accepter n'importe quelle interférence reçue, y compris l'interférence qui peut causer l'opération peu désirée.

This equipment complies with FCC and IC radiation exposure limits set forth for general population (uncontrolled environment). This device must not be co-located or operating in conjunction with any other antenna or transmitter.

Cet équipement est conforme aux limites d'exposition aux radiations de la FCC et IC définies pour la population générale (environnement non contrôlé). Cet appareil ne doit pas être co-localisé ou fonctionner en conjonction avec une autre antenne ou un autre émetteur.



This product can expose you to lead which is known to the state of California to cause cancer and birth defects or other reproductive harm.

For more information go to: www.P65warnings.ca.gov.

Ce produit peut vous exposer au plomb qui, dans l'état de la Californie, est reconnu pour causer le cancer, des anomalies congénitales ou d'autres problèmes de reproduction.

Pour plus d'informations, visitez: www.P65warnings.ca.gov.



Any retrofit or other field modification to a fire rated opening can potentially impact the fire rating of the opening, and Centrios™ makes no representations or warranties concerning what such impact may be in any specific situation. When retrofitting any portion of an existing fire rated opening, or specifying and installing a new fire-rated opening, please consult with a code specialist or local code official (Authority Having Jurisdiction) to ensure compliance with all applicable codes and ratings.



To avoid possible damage from electrostatic discharge (ESD), some basic precautions should be used when handling electronic components:

- Minimize build-up of static by touching and/or maintaining contact with unpainted metal surfaces such as door hinges, latches, and mounting plates especially when mounting electronic components such as readers and controllers onto the door.
- Leave components (reader and controller) protected in their respective anti-static bags until ready for installation
- Do not touch pins, leads or solder connections on the circuit boards


centrios
1
2
3
4
5
6
7
8
9
0

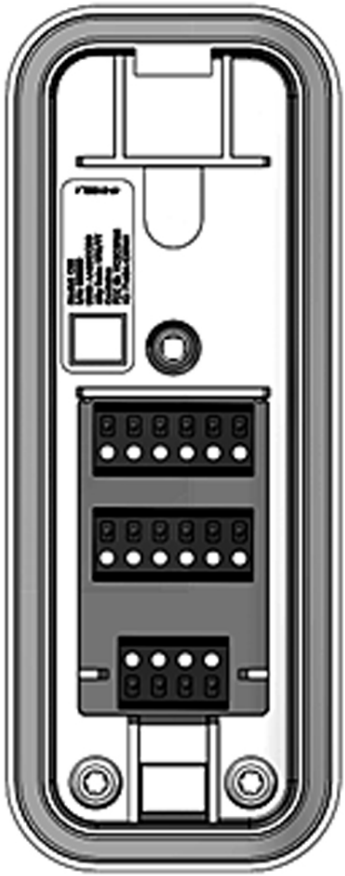

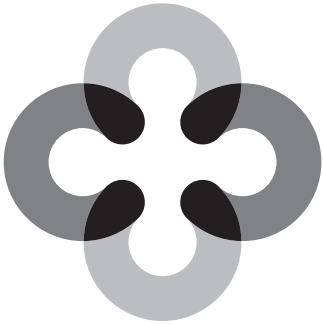

Contact Us

Phone
888-425-1001
Customer Service Email
support@centrios.com
Website
www.centrios.com

For small businesses owners who want a simpler, less hassle way to manage access to their premises, Centrios is a smart lock system specifically designed for small businesses that makes granting access and checking the status of doors simple, no matter where you are or what you're doing.

Centrios
Be there when you can't be there.

THE ASSA ABLOY GROUP is the world´s leading manufacturer and supplier of locking solutions, dedicated to satisfying end-user needs for security, safety and convenience.

Centrios is a business associated with ASSA ABLOY Access and Egress Hardware Group, Inc., an ASSA ABLOY Group company. Copyright © 2023, ASSA ABLOY Access and Egress Hardware Group, Inc. All rights reserved. Reproduction in whole or in part without the express written permission of ASSA ABLOY Access and Egress Hardware Group, Inc. is prohibited. Patent pending and/or patent www.assaabloydss.com/patents.

Part of ASSA ABLOY

80-9000-0007
06/23