centrios

Scan the QR code and follow along with our installation video

Installing your Cylindrical Lock

Thank you for purchasing a Centrios™ cylindrical lock, part of the Centrios™ smart lock system. Centrios is designed to help businesses like yours simplify how they manage who can access what and when.

Before you get started, please **download the Centrios app from the Google Play store or Apple App store.** Downloading the Centrios app first will ensure your mobile phone is compatible with the app and allow you to create your account, so you are ready to enroll your Centrios product.

If you have any questions, don't hesitate to contact us at support@centrios.com or view our support resources at centrios.com.

Let's do this.

What's in the box

Before you get started, take a minute to make sure you've got everything shown on this page.

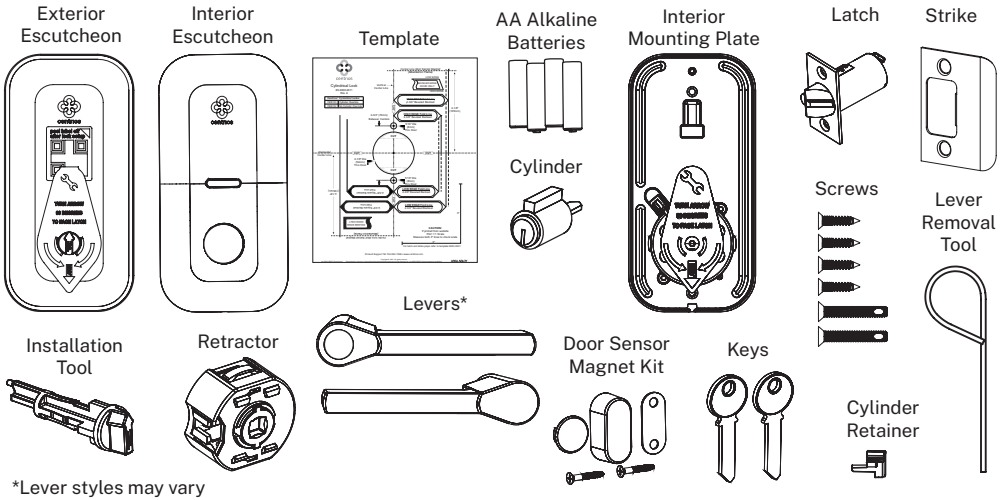

*Lever styles may vary

What else will you need?

In addition to your lock, you're going to need a #2 Phillips head screwdriver. Optionally you may need a #1 Phillips head screwdriver, drill, chisel, hammer, and a pencil (you may also need a slot head screwdriver too).

IMPORTANT
Retrofitting or modifying this product may impact its fire rating, safety features and warranty. Make sure you consult with code specifications to ensure you're complying with all codes and ratings.

centrios

1 Prepare your door, if necessary

Here, you'll get your door ready for its new lock, if necessary. You may have to drill holes and chisel out a space on the edge of the door for the latch plate.

For this step, use the template included in the box (Template No. 80-9000-0011).

This template is designed to be used on both square-edged and beveled-edge doors.

Make sure you have the template oriented the right way up for your specific type of door. **Double-check this is correct before drilling any holes in your door.**

NOTE: If you are replacing an older lock with your new Centrios lock, you may find the existing holes are already correct.

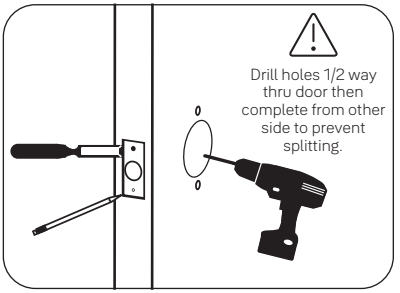

2 Prepare the frame and install the strike

Here, you'll position the strike that the latch will fit into.

For this, you'll need the strike itself and two of the #8-32 x 3/4" undercut flat head combo screws.

If the door doesn't have the required hole, drill a 1" diameter, 1/2" deep hole as shown.

If needed, use a chisel to make the strike flush with the rest of the door frame.

Fix the strike in place with the two screws.

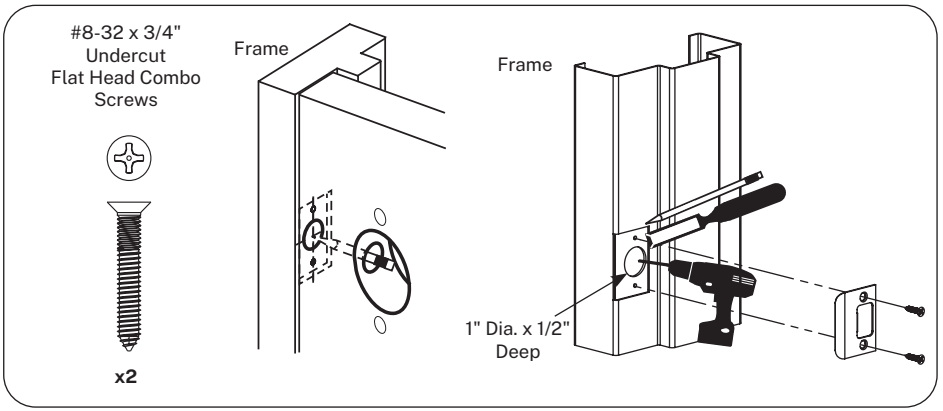

3 Install the latch

IMPORTANT: Don't forget, the slanted bevel of the latch must face the direction your door closes (see the overhead view).

For this you'll need the latch and two of the #8-32 x 3/4" undercut flat head combo screws.

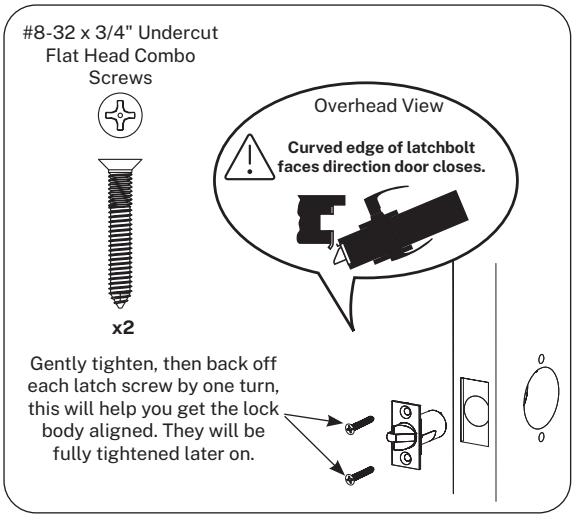

centrios

4 Set up the exterior escutcheon

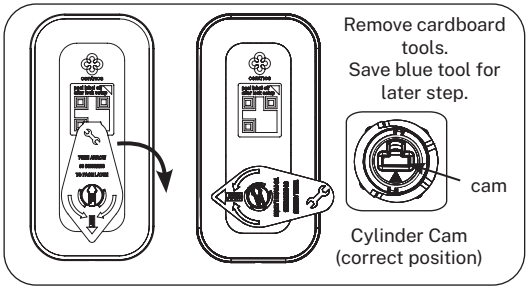

IMPORTANT: DO NOT remove the QR code label on the exterior escutcheon until the lock is completely installed, set up, and functioning.

We're now going to make sure your escutcheon is set up correctly. Do this procedure before you put the escutcheon on the door. It's easy to do in the palm of your hand.

The escutcheon has a temporary cardboard tool fitted. Holding the escutcheon up to the outside face of the door, rotate the cardboard tool 90° so that the printed arrow points towards the latch. It will click into place. You can now remove the cardboard tools. Be sure to save the blue tool for a later step.

IMPORTANT: the blue plastic 'UP' indicator piece may rotate when you turn the cardboard tool. Make sure the blue arrow is always pointing up after you rotate the cardboard tool.

4a Need to reset escutcheon or mounting plate?

If you set up the exterior escutcheon or interior mounting plate with the cardboard tool pointing in the wrong direction, here's how you change it:

If the escutcheon or mounting plate is installed on the door, remove it from the door.

If the lever and cylinder are installed, remove them from the escutcheon/mounting plate (step 5).

Replace the cardboard tool on the escutcheon or mounting plate if necessary.

For the outside escutcheon, use the blue plastic tool to re-set the cylinder cam from step 4 to the up position prior to re-handing.

On the back of the escutcheon or mounting plate use a flat bladed screwdriver to push the tab labeled HAND LEVER down.

You should now be able to rotate the cardboard tool in the correct direction so that it points to the latch side of the door.

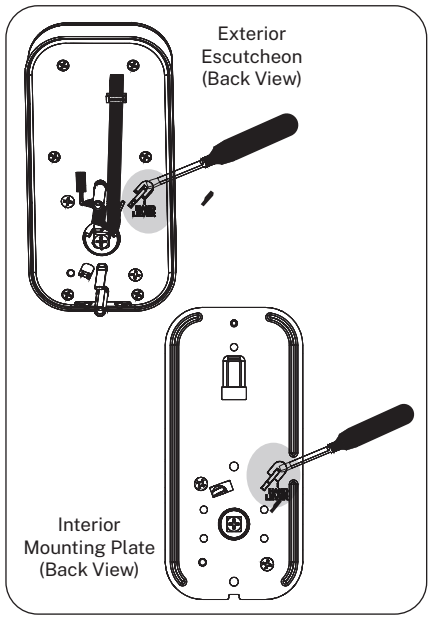

5 Install the cylinder into the lever (if necessary)

If you need to install the cylinder into the lever, first make sure the cylinder tailpiece is aligned in the same direction as the cylinder bible (picture).

Then, slide the cylinder all the way into the lever.

Press the cylinder retainer into the lever to restrain the cylinder.

When you insert the key, be sure to not press too hard so no parts fall out.

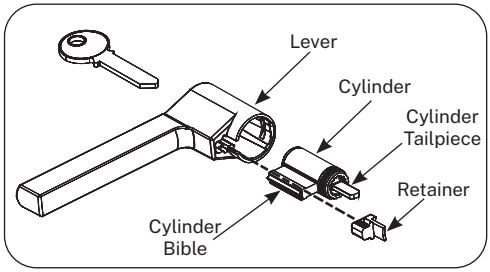

6 Install the exterior lever and cylinder

We're now ready to install the lever and cylinder to the outside (exterior) of your door.

Insert one of the keys into the cylinder, then turn the key 45 degrees clockwise. Also turn the Cylinder Cam (see Step 4) 45 degrees to match.

Now you can slide the lever onto the shank of the exterior escutcheon. Press the lever until it clicks into place.

Turn the key back to the horizontal position and remove it from the cylinder. If the lever is not seated properly, you will not be able to rotate the key back to the horizontal position.

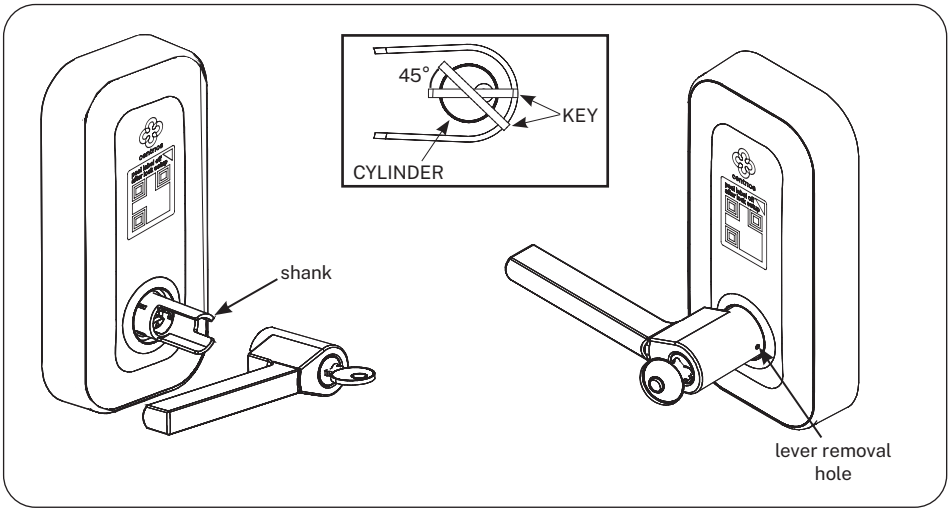

Need to remove the outside lever? Turn the key 45°, press the installation tool into the small hole on the side of the lever. This will depress the lever catch. Then pull the lever and cylinder off the shank.

centrios

7 Install the retractor on the exterior escutcheon

It's time to install the retractor onto the back of the escutcheon.

One side of the retractor has a curved opening. The curved opening should face the latch (away from the hinges).

Slide the retractor onto the flat posts on the escutcheon and secure the flat cable under the clip on the top of the retractor.

Make sure the retractor can slide back and forth on the flat posts easily. If it does not, make sure the posts aren't bent.

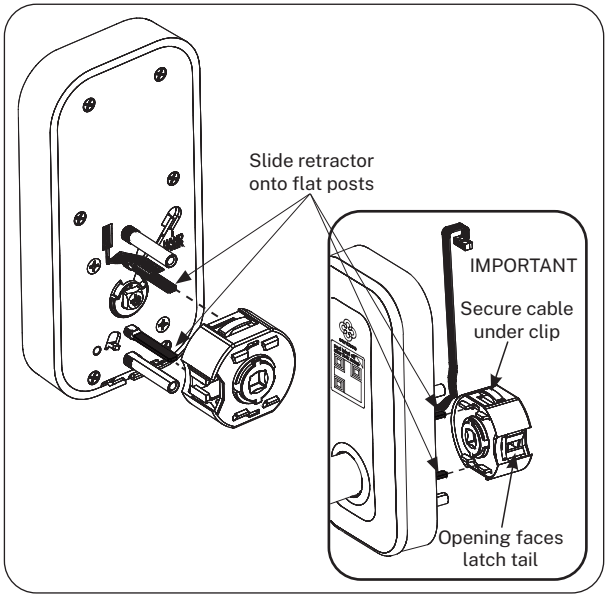

8 Install the exterior escutcheon and retractor assembly

Now we can install the combined escutcheon and retractor onto the exterior of your door.

Simply slide the unit into the holes you drilled earlier, making sure that the notches on the opening of the retractor line up with the notches on the latch that you've already installed.

Done! The exterior set up of your door is now complete.

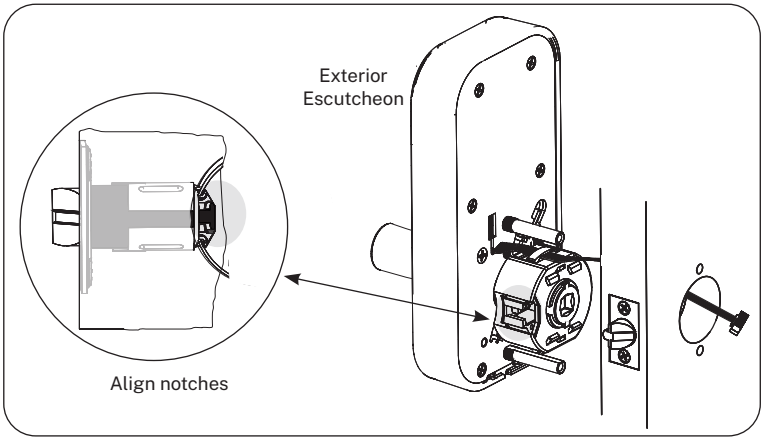

9 Install the interior mounting plate

Now we can move to the interior of the door.

First, feed connector of the harness through the rectangle hole in the mounting plate. Next, rotate the cardboard tool 90° so that the printed arrow points towards the latch edge of the door. It will click into place.

You can now remove the cardboard tool.

If you set up the interior mounting plate with the cardboard tool pointing in the wrong direction, see step 4a for instructions on how to change it.

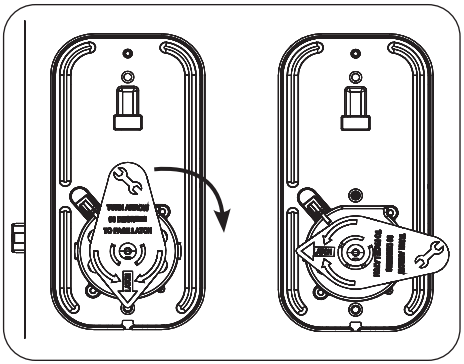

Gently pull the harness through the plate, as you place it against the face of the door, eliminating slack in the harness. You can now secure the mounting plate to your door using two of the #10-32 x 1-1/4" flat head machine screws.

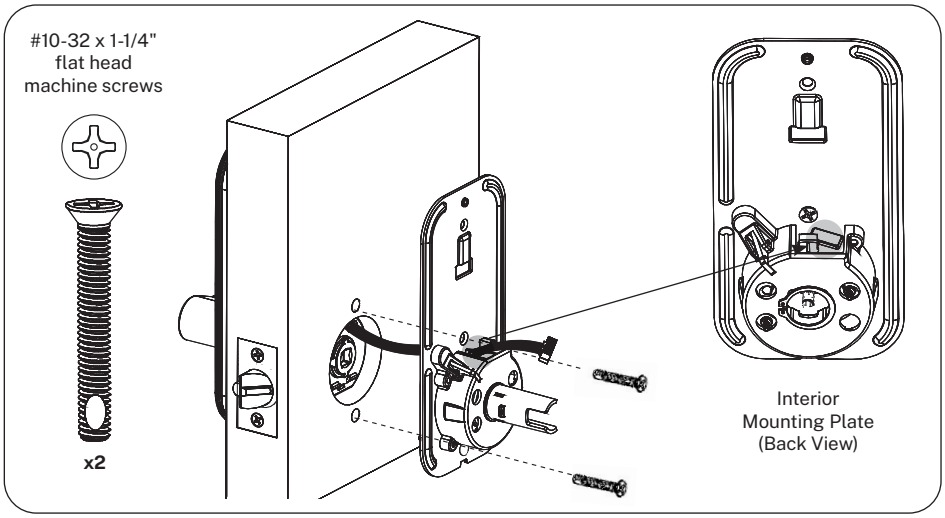

centrios

10 Install the interior escutcheon

We can now get the interior escutcheon in place.

If the battery cover is snapped into place, slide the battery cover up using the blue installation tool (saved from step 4).

This will allow you to feed the harness and connector through the hole at the top (back side) of the interior escutcheon.

Now, plug in the connector at the top right of the interior escutcheon.

NOTE: For doors thicker than 1 3/4", remove the tape around the wire loop to have a longer harness length needed to reach the plug.

Then, gently press the interior escutcheon over the interior mounting plate you've already fitted. Make sure you pull the harness back so that it isn't too loose inside the interior escutcheon. Tuck the extra wire between the mounting plate and the escutcheon.

Finally, secure the escutcheon to your door by pressing the top of the plastic housing to the door while tightening the (captive) screw at the top of the escutcheon.

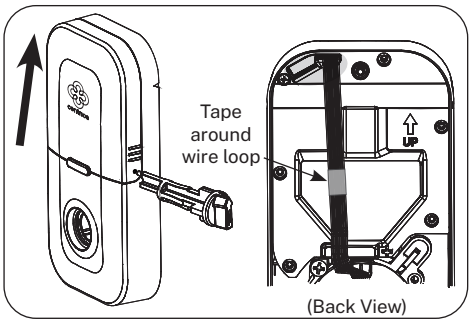

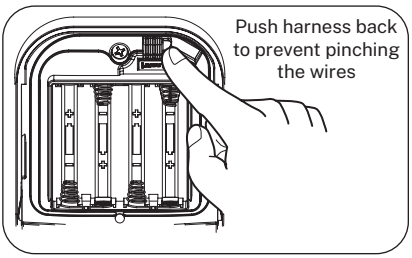

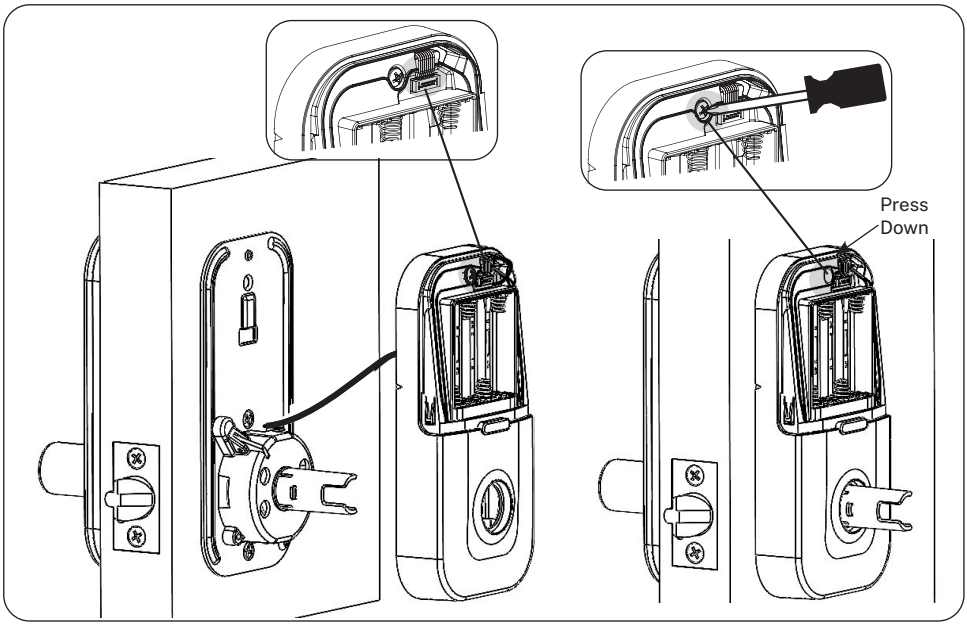

11 Install the batteries, battery cover, and interior lever

We can now finish up with the escutcheon.

Insert the four AA batteries into the battery compartment and slide the cover down until it clicks into place. When you slide the cover on, make sure you aren't pinching the wiring harness.

Slide the lever onto the protruding shank. Again, it will click into place. Give it a pull to make sure it's seated correctly.

You can now fully tighten the latch screws we left a little loose earlier.

We are now done with the interior of your door!

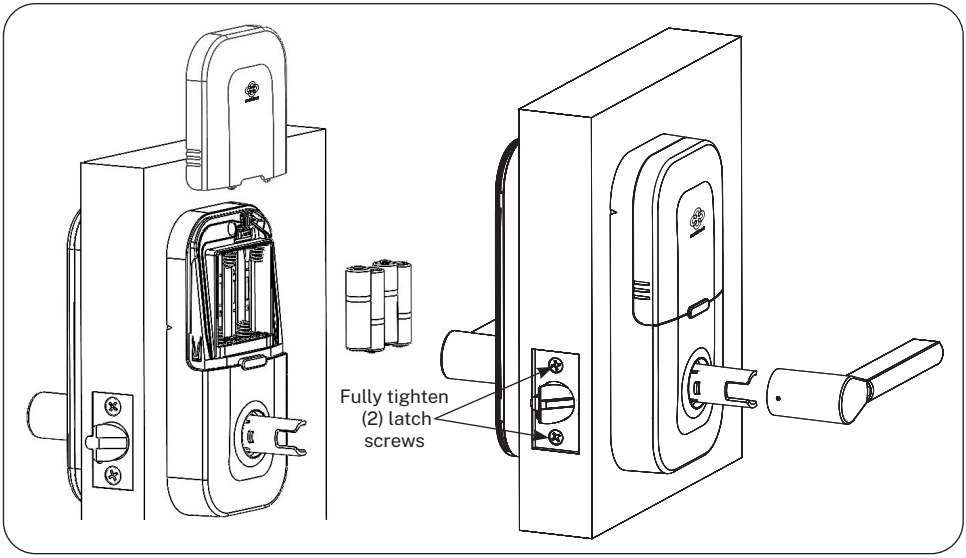

NOTE: Once you install the batteries, it may take up to two (2) minutes for the lock to become fully operational.

centrios

12 Install the door sensor magnet

Just a couple more things and we're all finished.

We now need to install the door sensor magnet. You can either have this surface mounted or flush mount it into the door frame.

The pictures below show where to install the door sensor magnet if you have a door that swings in (inswing) or swings out (outswing). The distance (D) is the maximum number of inches from the center of the magnet to the indicated part of the door frame.

IMPORTANT: Installing the surface mount sensor on an outswing door is not recommended. The magnet will be too far way from the lock to detect if the door is closed.

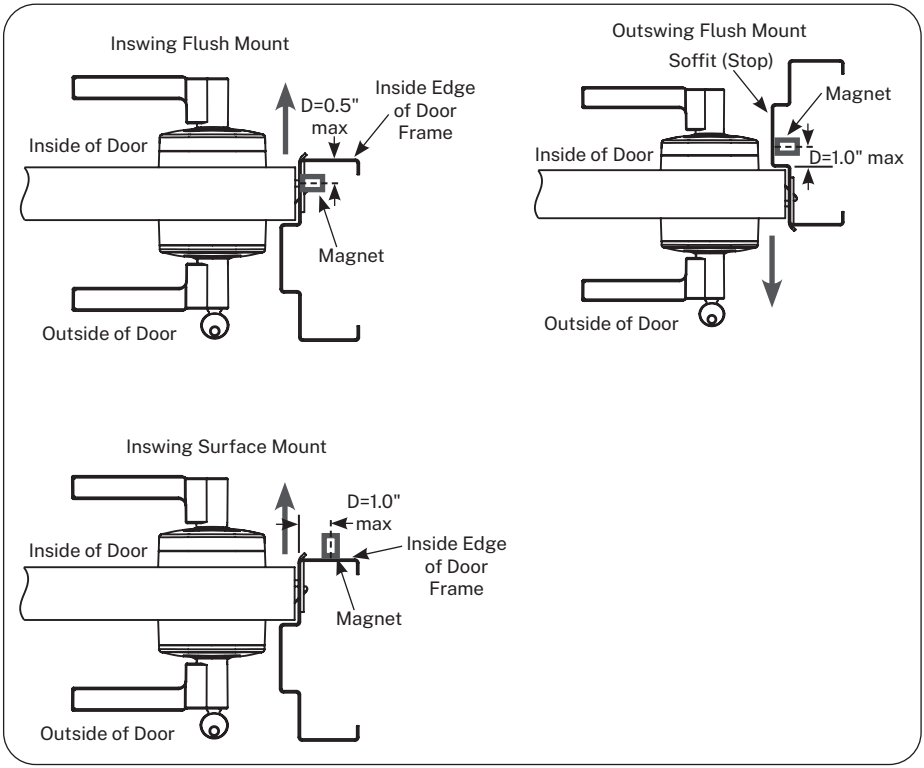

If you are flush mounting...

Start by marking off a horizontal line on your door frame using the guide arrow on the escutcheon.

Remove the magnet core from the surface mount assembly.

Then, remove the liner from the flush mount cover. Press the magnet core onto the cover until it snaps into place.

Drill a 5/8" diameter hole 1/2" deep in your door frame, centered on the line you marked earlier.

IMPORTANT: If you have a hollow metal door frame, be sure to drill the hole the correct size. This will prevent the magnet from being pushed into the frame.

Finally, press the flush mount magnet assembly into the hole.

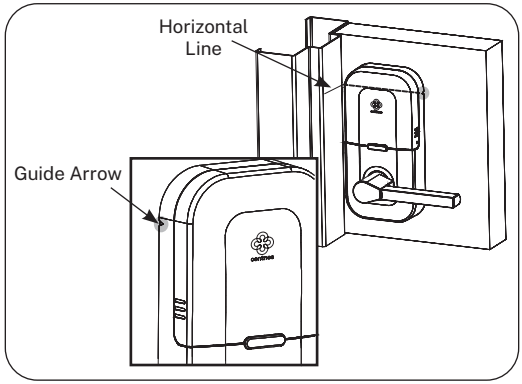

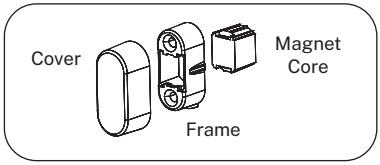

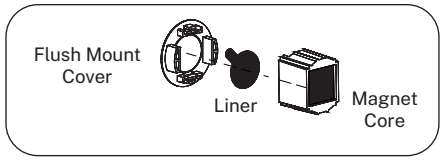

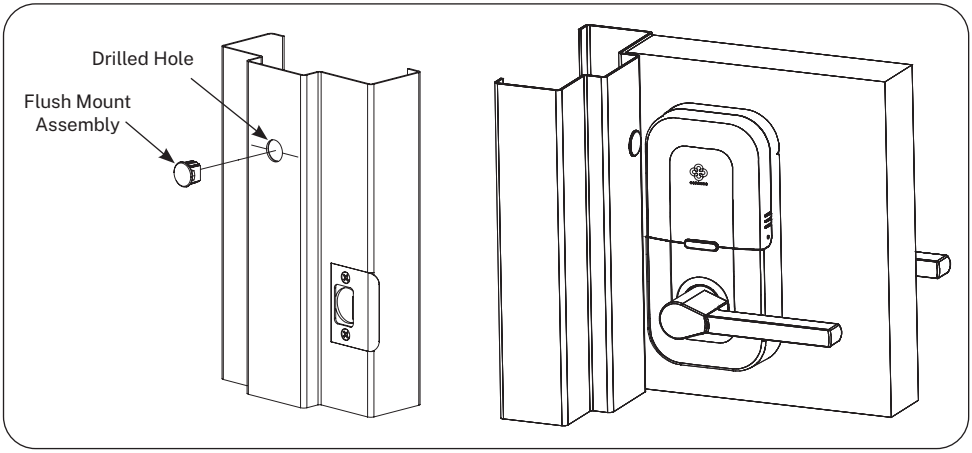

centrios

If you are surface mounting...

Start by marking off a horizontal line on your door frame using the guide arrow on the escutcheon.

Now apply double-sided adhesive to the surface mount magnet assembly. Then stick this to the frame centering it on the horizontal line you just marked on your door frame.

Secure the magnet with two screws using a #1 Phillips driver, and then re-install the plastic cover over the magnet assembly.

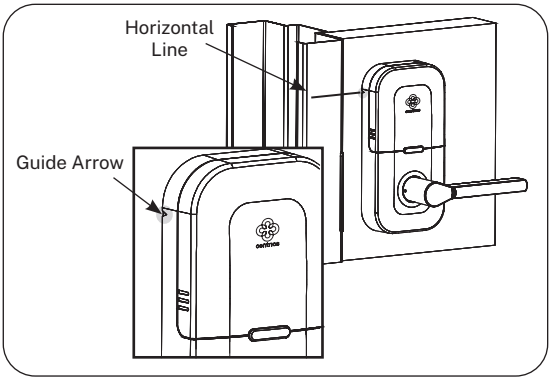

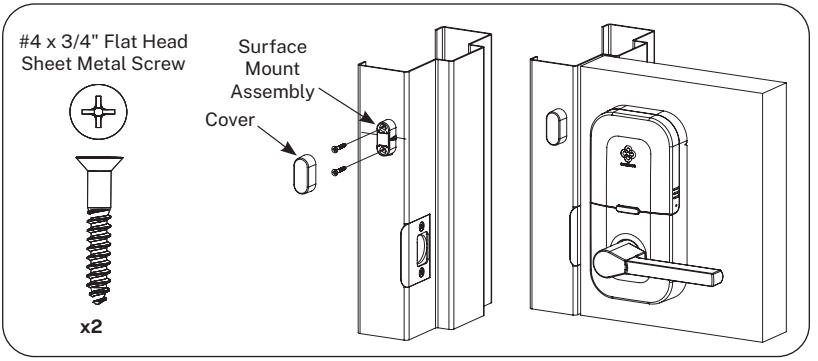

13 Programming the lock

Now that you have the lock hardware installed, it is time to set up the lock programming.

If you haven't done so, first download the Centrios app to your mobile device from the Google Play Store or the Apple App Store.

The Centrios app will guide you through creating an account and adding devices to the system. During the set up process you will be prompted to scan the QR code label on the exterior escutcheon.

Once the lock is set up and functioning properly, remove the QR code label and discard it.

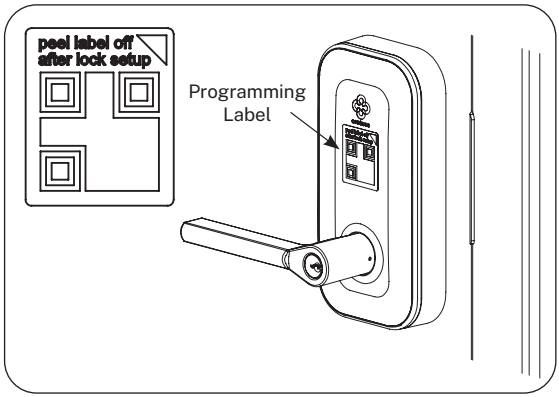

We're all done

That's it, you're good to go.

Don't forget, we're here to help if you need it. Simply call us at 888-425-1001, email us at support@centrios.com, or check out our support pages at centrios.com.

Thanks again for choosing Centrios for your business.

centrios

14 Maintenance

Changing the batteries:

It is recommended that the batteries be changed once per year. When changing the batteries it is recommended a name-brand alkaline battery be used. The product was not certified for use with rechargeable batteries.

Remove the battery cover using the blue installation tool, or other small pin-like device (paper clip) to unlatch the battery cover. Remove the old batteries and replace with four (4) new AA alkaline batteries. Be sure to put the batteries in the correct position. Now slide the battery cover down until it clicks into place.

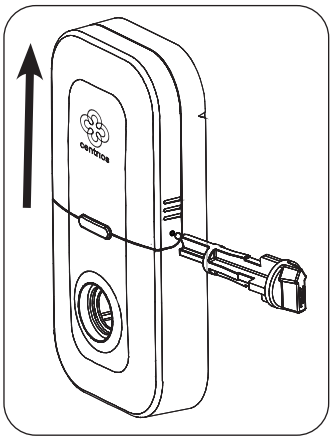

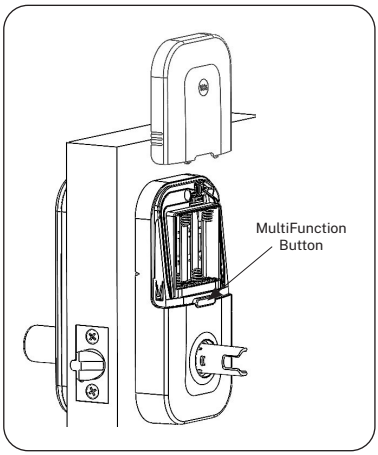

Factory Reset:

If a factory reset is necessary, do the following:

Remove the battery cover using the blue installation tool, or other small pin-like device (paper clip) to unlatch the battery cover. Remove one battery and then press and hold the MultiFunction button. While holding the MultiFuction button, replace the battery and continue to hold the MultiFunction button until a yellow LED animation appears. The button may need to be held down for 10 to 15 seconds. Then release the button and the lock will perform a factory reset.

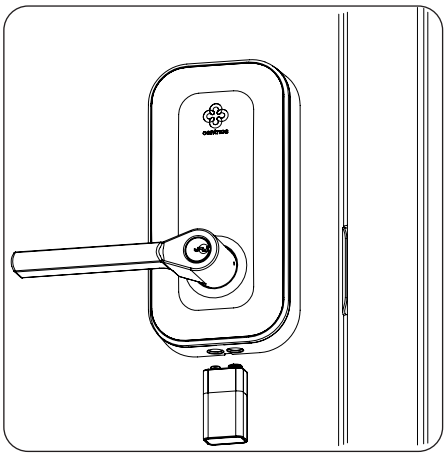

9VDC Battery Power:

If the AA batteries go dead, you can use a 9VDC battery to power the lock for a short period of time. Press the terminals on the 9VDC battery against the contacts on the bottom of the exterior escutcheon to power the lock. (It does not matter which side the positive or negative terminal is on.) Wait for the lock to power up, as indicated by a beep and LED flash (it may take up to 15 seconds). Then apply your credential as normal to unlock the door. Be sure to keep the 9VDC battery in place while you unlock the door.

IMPORTANT: Change the AA batteries as soon as possible.

centrios

Warnings

Changes or modifications to this device not expressly approved by ASSA ABLOY could void the user's authority to operate the equipment.

FCC:

This equipment has been tested and found to comply with the limits for a Class B digital device, pursuant to Part 15 of the FCC Rules. These limits are designed to provide reasonable protection against harmful interference in a residential installation. This equipment generates, uses, and can radiate radio frequency energy and, if not installed and used in accordance with the instructions, may cause harmful interference to radio communications. However, there is no guarantee that interference will not occur in a particular installation. If this equipment does cause harmful interference to radio or television reception, which can be determined by turning the equipment off and on, the user is encouraged to try to correct the interference by one or more of the following measures:
Reorient or relocate the receiving antenna.
Increase the separation between the equipment and receiver.
Connect the equipment into an outlet on a circuit different from that to which the receiver is connected.
Consult the dealer or an experienced radio/TV technician for help.

Industry Canada:

Under Industry Canada regulations, this radio transmitter may only operate using an antenna of a type and maximum (or lesser) gain approved for the transmitter by Industry Canada. To reduce potential radio interference to other users, the antenna type and its gain should be so chosen that the equivalent isotropically radiated power (e.i.r.p.) is not more than that necessary for successful communication.
Conformément à la réglementation d'Industrie Canada, le présent émetteur radio peut fonctionner avec une antenne d'un type et d'un gain maximal (ou inférieur) approuvé pour l'émetteur par Industrie Canada. Dans le but de réduire les risques de brouillage radioélectrique à l'intention des autres utilisateurs, il faut choisir le type d'antenne et son gain de sorte que la puissance isotrope rayonnée équivalente (p.i.r.e.) ne dépasse pas l'intensité nécessaire à l'établissement d'une communication satisfaisante.

General Regulatory Compliance:

This device contains license-exempt transmitter(s)/receiver(s) that comply with Innovation, Science and Economic Development Canada's license-exempt RSS(s). This device complies with part 15 of the FCC Rules. Operation is subject to the following two conditions: (1) this device may not cause harmful interference, and (2) this device must accept any interference received, including interference that may cause undesired operation.
Cet appareil contient des émetteurs/réceptuers exemptés de licence conformes aux RSS d'Innovation, Sciences et Développment économique Canada. Cet appareil est conforme à la section 15 de la réglementation de la FCC.
L'opération est sujette aux deux conditions suivantes: (1) ce dispositif peut ne pas causer l'interférence nocive, et (2) ce dispositif doit accepter n'importe quelle interférence reçue, y compris l'interférence qui peut causer l'opération peu désirée.

This equipment complies with FCC and IC radiation exposure limits set forth for general population (uncontrolled environment). This device must not be co-located or operating in conjunction with any other antenna or transmitter and must be installed to provide a separation distance of at least 15 mm from all persons.
Cet équipement est conforme aux limites d'exposition aux radiations de la FCC et IC définies pour la population générale (environnement non contrôlé). Cet appareil ne doit pas être co-localisé ou fonctionner en conjonction avec une autre antenne ou un autre émetteur. Cet équipement doit être installépour fournir une distance de séparation d'au moins 15 mm de toutes les personnes.



CAUTION: Risk of Explosion if battery is replaced by an incorrect type. Dispose of used batteries according to the instructions.
AVERTIR: Risque d'explosion si la batterie est remplacée par un type incorrect. Jetez le batteries usagées conformément aux instructions.



This product can expose you to lead which is known to the state of California to cause cancer and birth defects or other reproductive harm.
For more information go to: www.P65warnings.ca.gov.
Ce produit peut vous exposer au plomb qui, dans l'état de la Californie, est reconnu pour causer le cancer, des anomalies congénitales ou d'autres problèmes de reproduction.
Pour plus d'informations, visitez: www.P65warnings.ca.gov.



Any retrofit or other field modification to a fire rated opening can potentially impact the fire rating of the opening, and Centrios™ makes no representations or warranties concerning what such impact may be in any specific situation. When retrofitting any portion of an existing fire rated opening, or specifying and installing a new fire-rated opening, please consult with a code specialist or local code official (Authority Having Jurisdiction) to ensure compliance with all applicable codes and ratings.



To avoid possible damage from electrostatic discharge (ESD), some basic precautions should be used when handling electronic components:

- Minimize build-up of static by touching and/or maintaining contact with unpainted metal surfaces such as door hinges, latches, and mounting plates especially when mounting electronic components such as readers and controllers onto the door.
- Leave components (reader and controller) protected in their respective anti-static bags until ready for installation
- Do not touch pins, leads or solder connections on the circuit boards



Contact Us

Phone
888-425-1001
Customer Service Email
support@centrios.com
Website
www.centrios.com

For small businesses owners who want a simpler, less hassle way to manage access to their premises, Centrios is a smart lock system specifically designed for small businesses that makes granting access and checking the status of doors simple, no matter where you are or what you're doing.

Centrios
Be there when you can't be there.

THE ASSA ABLOY GROUP is the world´s leading manufacturer and supplier of locking solutions, dedicated to satisfying end-user needs for security, safety and convenience.

Centrios is a business associated with ASSA ABLOY Access and Egress Hardware Group, Inc., an ASSA ABLOY Group company. Copyright © 2023, ASSA ABLOY Access and Egress Hardware Group, Inc. All rights reserved. Reproduction in whole or in part without the express written permission of ASSA ABLOY Access and Egress Hardware Group, Inc. is prohibited. Patent pending and/or patent www.assaabloydss.com/patents.

Part of ASSA ABLOY

80-9000-0001
06/23