CX Series Magnetic Lock Mounting Accessories

CX-91S and CX-92S SERIES ACCESSORIES

Brackets

CX-MA0610
L bracket for 600 lbs. magnetic lock



CX-MA0613
LZ bracket for 600 lbs. magnetic lock



CX-MA1210
L bracket for 1,200 lbs. magnetic lock



CX-MA1213
LZ bracket for 1,200 lbs. magnetic lock



Spacer Bars

CX-MA0614-12
1/2" spacer bar for 600 lbs. magnetic lock



CX-MA0614-38
3/8" spacer bar for 600 lbs. magnetic lock



CX-MA0614-58
5/8" spacer bar for 600 lbs. magnetic lock



CX-MA1214-12
1/2" spacer bar for 1,200 lbs. magnetic lock



CX-MA1214-38
3/8" spacer bar for 1,200 lbs. magnetic lock



CX-MA1214-58
5/8" spacer bar for 1,200 lbs. magnetic lock



Armature / Mounting Kits

CX-MA0612
Armature housing for 600 lbs. magnetic lock



CX-MA0611
Glass (*1/2" thick*) mounting kit for 600 lbs. magnetic lock



CX-MA1212
Armature housing for 1,200 lbs. magnetic lock



CX-MA1211
Glass (*1/2" thick*) mounting kit for 1,200 lbs. magnetic lock



CX-MA1215-95
Split Armature for 1,200 lbs. magnetic lock 9.5mm



CX-MA1215-16
Split Armature for 1,200 lbs. magnetic lock 16mm



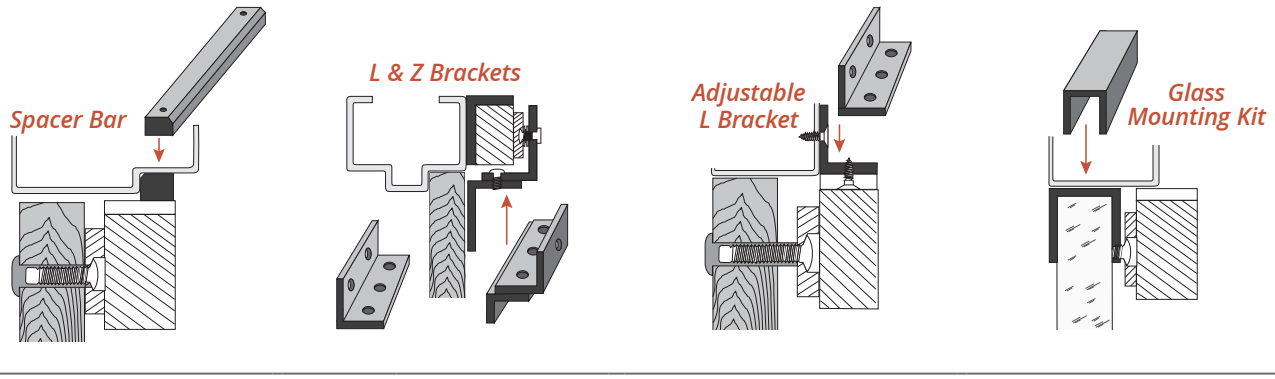

CAMDEN DOOR CONTROLS
Opening New Doors to Innovation, Quality and Support!

5502 Timberlea Blvd. Mississauga, ON Canada L4W 2T7 • Toll Free: 1 877 226-3369 (CAMDEN9)
Tel: (905) 366-3377 • Fax: (905) 366-3378 • E-mail: info@camdencontrols.com • www.camdencontrols.com

BSI Certified ISO 9001: 2015
FS 541752

Part #: MKTG-LIT-SP-MAGACC