CX-MA0614-25 & CX-MA1214-25
Spacer for 600 and 1200 LB Magnetic Locks

INSTALLATION INSTRUCTIONS

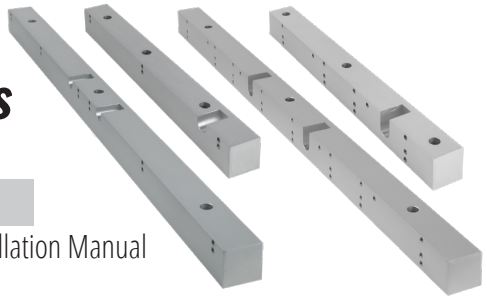

THIS PACKAGE INCLUDES:

1 - CX-MA0614-25(D)/CX-MA1214-25(D)
3 - Metal Screws #12
3 - M4 Screws (CX-MA0614-25)
6 - M4 Screws (CX-MA0614-25D)
8 - M4 Screws (CX-MA1214-25)
16 - M4 Screws (CX-MA1214-25D)
1 - Installation Manual

1. GENERAL DESCRIPTION

The Camden CX-MA0614-25(D)/CX-MA1214-25(D) is a Spacer bar that allows a 600 or 1200 LB (Single/Double Door) Magnetic Lock to mount onto Door Frames with a narrow depth between the header jamb and stop.

2. SPECIFICATIONS

There are four Spacer models .

CX-MA0614-25	600 LB Single Door
CX-MA0614-25D	600 LB Double Door
CX-MA1214-25	1200 LB Single Door
CX-MA1214-25D	1200 LB Double Door

3. APPLICATION

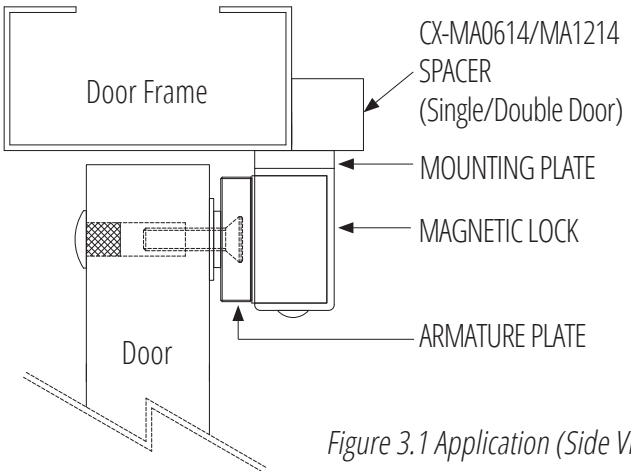

Figure 3.1 Application (Side View)

4. DIMENSIONS

Figure 4.1 Dimensions

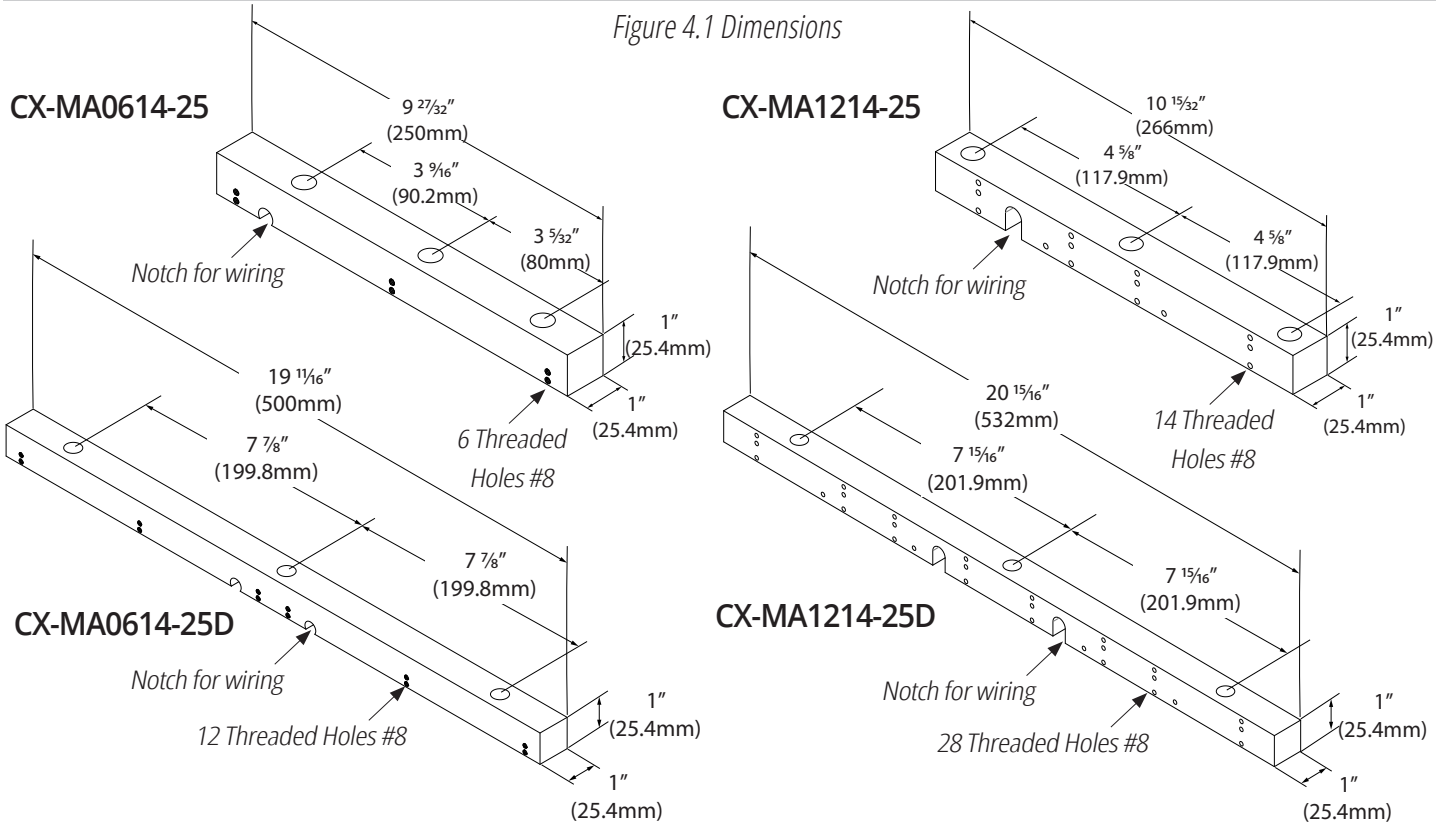

5. INSTALLATION

1. Mark and drill the Spacer holes on the Door Frame.
2. Attach the Spacer to the Mounting Plate of the Magnetic Lock with the screws provided. Determine the spacing alignment between lock and armature, and fasten the screws along the corresponding threaded holes.

   (Refer to the Magnetic Lock manual for instructions on removing and replacing its Mounting Plate.)
3. Insert the wires through the hole and notch, and then attach the Mounting Plate (with Spacer) to the Magnetic Lock.
4. Mount the Spacer with the Magnetic Lock on the Door Frame.

Figure 5.1a Single Door Installation

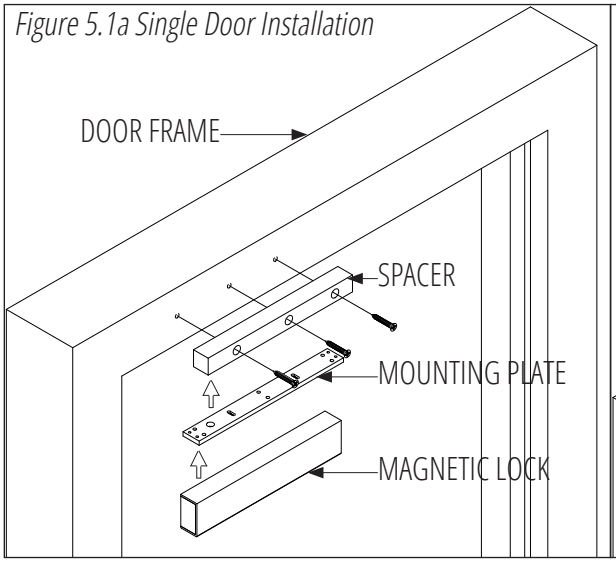

Figure 5.2a Double Door Installation

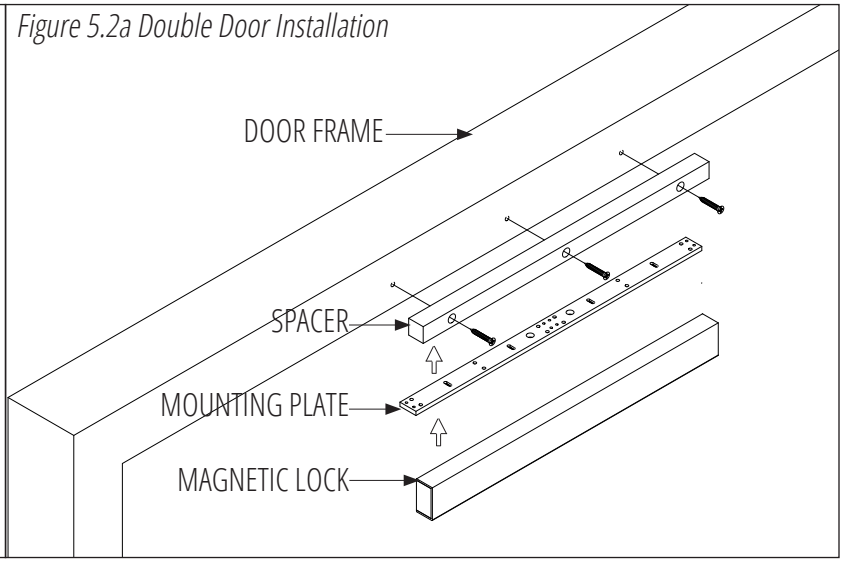

Figure 5.1b Single Door Installation

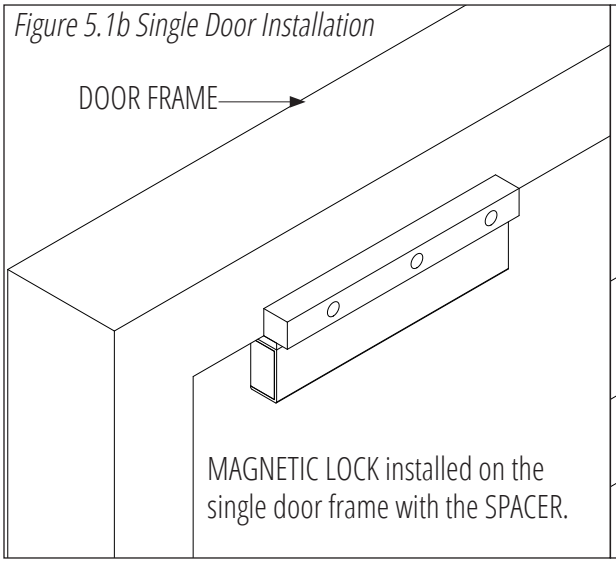

Figure 5.2b Double Door Installation

