ADA Compliant

Listed Components

CX-WEC SERIES

EMERGENCY CALL SYSTEMS FOR UNIVERSAL AND BARRIER FREE RESTROOMS









CX-WEC10K2

FEATURES

- COMPLETE EQUIPMENT PACKAGES SPECIFICALLY DESIGNED TO MEET THE REQUIREMENTS OF ONTARIO REG. 368/13 AMENDMENT TO 2012 OBC FOR BARRIER FREE & UNIVERSAL RESTROOMS.
- DESIGNED FOR UNIVERSAL RESTROOMS WITH OR WITHOUT LOW ENERGY DOOR OPERATORS.
- FOR USE WITH CAMDEN CX-WC SERIES BARRIER FREE RESTROOM CONTROL KITS.
- AUDIBLE AND VISUAL ANNUNCIATION OUTSIDE RESTROOM OF AN EMERGENCY CONDITION
- WITH 'PUSH/PULL' 'PRESS FOR EMERGENCY ASSISTANCE' MAINTAINED MUSHROOM PUSH BUTTON OR WITH LATCHING RELAY FOR USE WITH MOMENTARY SWITCHES, INCLUDING TAPE (RIBBON) SWITCHES
- 3 YEAR WARRANTY

DESCRIPTION

Camden Door Controls CX-WEC Series offer a range of components and complete equipment packages designed to meet building code requirements for universal restrooms. Emergency call system kits include a push/pull mushroom 'PRESS FOR ASSISTANCE' push button, or the option to use a momentary switch. Audible and visual annunciation of the request for assistance is provided inside the restroom by a flush mount single gang LED annunciator with adjustable sounder, and outside the restroom by a single gang dome light with adjustable sounder. If activation and annunciation in one product is desired, a double gang mushroom button and LED annunciator combo unit is offered. All equipment packages include an 'IN THE EVENT OF AN EMERGENCY' instructional sign, with 1" (25mm) lettering, as required by code. CX-WEC Series emergency call systems are available in English, French and Bilingual.

APPLICATION

Camden Door Controls CX-WEC Series emergency call systems and components are specifically designed to meet the latest requirements of Ontario regulation 368/13 amendment to the 2012 Ontario Building Code, for barrier free and universal restrooms. They are designed for universal restrooms with or without low energy door operators. System kits include a wide selection activation switches, audible and visual annunciation and signage.

5502 Timberlea Blvd. Mississauga, ON Canada L4W 2T7 • Toll Free: 1 877 226-3369 (CAMDEN9)
Tel: (905) 366-3377 • Fax: (905) 366-3378 • E-mail: info@camdencontrols.com • www.camdencontrols.com

COMPONENTS

See individual product spec sheets for a complete list of product information for each model shown.

CM-450R/12

1-5/8" MUSHROOM PUSH BUTTON, PUSH/PULL, 'PRESS FOR EMERGENCY ASSISTANCE'

- PUSH/PULL MAINTAINED OPERATION
- SINGLE GANG STAINLESS STEEL FACEPLATE
- 5 INPUTS, INCLUDING A 'WET' INPUT
- LARGE 3 SEGMENT DISPLAY IS EASIER TO VIEW AND UNDERSTAND, THAN COMPETITIVE MODELS.



CM-450R/12

CM-AF501SO

SINGLE GANG LED ANNUNCIATOR WITH ADJUSTABLE SOUNDER

- WHITE OUT 'ASSISTANCE REQUESTED' MESSAGE ONLY LEGIBLE UPON ACTIVATION
- SINGLE GANG LED ANNUNCIATOR WITH ADJUSTABLE SOUNDER
- SINGLE GANG HEAVY DUTY BRUSHED STAINLESS STEEL FACEPLATE
- SUPER BRIGHT LED ILLUMINATION
- FIELD ADJUSTABLE 85 DB PIEZO SOUND ALERT, DESIGNED TO CONFIRM REQUEST



CM-AF501SO

CM-AF540SO

DOUBLE GANG 'PRESS FOR EMERGENCY ASSISTANCE' PUSH BUTTON & LED ANNUNCIATOR

- DOUBLE GANG, COMBINING ACTIVATION AND ANNUNCIATION IN ONE DEVICE
- 1-5/8" MAINTAINED MUSHROOM PUSH BUTTON
- SUPER BRIGHT LED ILLUMINATION
- WHITE OUT 'ASSISTANCE REQUESTED' MESSAGE ONLY LEGIBLE UPON ACTIVATION



CM-AF540SO

CM-AF141SO / CM-AF142SO

'ASSISTANCE REQUIRED' DOME LIGHT WITH ADJUSTABLE SOUNDER

- CM-AF141S0: WHITE ONLY
- CM-AF142S0: RED/BLUE/GREEN/WHITE
- WEATHER AND VANDAL RESISTANT
- LOUD 93 DB PIEZO SOUNDER, WITH VOLUME ADJUSTMENT
- SUPER BRIGHT LED ILLUMINATION
- 'ASSISTANCE REQUIRED' TEXT ON LENS (ENG., FR. AND BILINGUAL)
- FOR INDOOR OR OUTDOOR USE
- 4"W X 5 1/2"H DRESS PLATE INCLUDED



CM-AF141SO


CM-AF142SO

CM-8010/13

MOMENTARY, 'PRESS FOR RESET' 1" RED PUSH BUTTON

- CONVENIENT RESET OF EMERGENCY CALL SYSTEM WHEN UTILIZING MOMENTARY 'PRESS FOR EMERGENCY ASSISTANCE' SWITCHES.
- VANDAL RESISTANT, CAST ALUMINUM FACEPLATE WITH METAL BUTTON COLLAR
- LASER ETCHED GRAPHIC TEXT



CM-8010/13

CM-1205/14

MOMENTARY, 'W/C SYSTEM RESET' FLUSH MOUNT KEY SWITCH, WITH CYLINDER & KEYS

- SECURE RESET OF EMERGENCY CALL SYSTEM WHEN UTILIZING MOMENTARY 'PRESS FOR EMERGENCY ASSISTANCE' SWITCHES.
- HEAVY GAUGE STAINLESS STEEL FACEPLATE
- SOLID BRASS MORTISE KEY CYLINDER WITH 2 KEYS
- LASER ETCHED GRAPHIC TEXT



CM-1205/14

CAMDEN DOOR CONTROLS
5502 Timberlea Blvd. Mississauga, ON Canada L4W 2T7 • Toll Free: 1 877 226-3369 (CAMDEN9)
Tel: (905) 366-3377 • Fax: (905) 366-3378 • E-mail: info@camdencontrols.com • www.camdencontrols.com

BSI Certified ISO 9001: 2015
FS 541752

CX-LRS12/ CX-LRS24

LATCHING RELAY ASSEMBLY FOR EMERGENCY CALL SYSTEM

- FOR USE WITH MOMENTARY 'PRESS FOR ASSISTANCE' SWITCHES
- SELECTION OF 12V OR 24V LATCHING RELAYS



CM-LRS-12

CM-SE21A / CM-SF20A

INSTRUCTIONAL SIGNAGE FOR UNIVERSAL RESTROOMS

- COMPLIES WITH ONTARIO BUILDING CODE REQUIREMENTS
- WHITE, 1/16"(1.6MM) THICK PANEL, 6"H X 10 5/8"W, (152MM X 270 MM)
- FIRE RATED EXPANDED PVC
- RED 1" (25MM) LETTERING
- EASILY MOUNTS TO WALL (GLUE OR SCREWS)

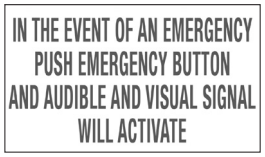

CM-SE21A



CM-SF20A

SPECIFICATIONS

CM-450R/12

MUSHROOM PUSH BUTTON, PUSH/PULL, 'PRESS FOR EMERGENCY ASSISTANCE'

VOLTAGE:	12/24V AC/DC
CONTACT TYPE:	DPST, MAINTAINED
CONTACT RATING:	10 AMPS
STD. FINISH:	STAINLESS STEEL

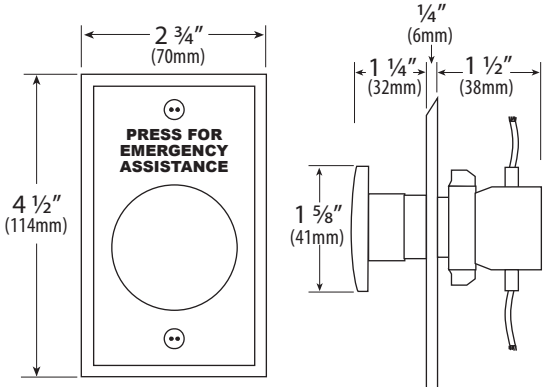

CM-450R/12

CM-AF501SO

VOLTAGE:	12/30V AC/DC
CURRENT DRAW:	30 - 75MA
SOUNDER:	ADJUSTABLE, 85DB @ 10CM MAX.
STD. FINISH:	STAINLESS STEEL

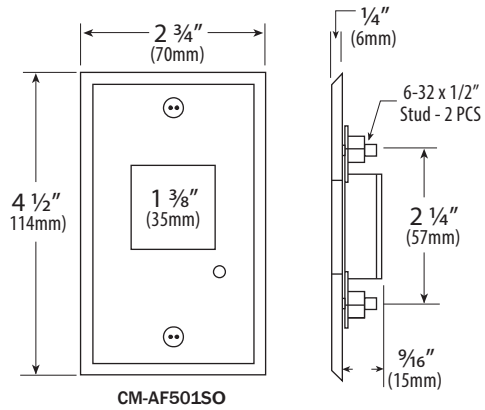

CM-AF501SO

CM-1205/14

VOLTAGE:	12/24V AC/DC
CONTACT TYPE:	SPST MOMENTARY, N/C
CONTACT RATING:	6 AMPS
SWITCH LIFE:	ALL: 100,000 CYCLES
STD. FINISH:	STAINLESS STEEL

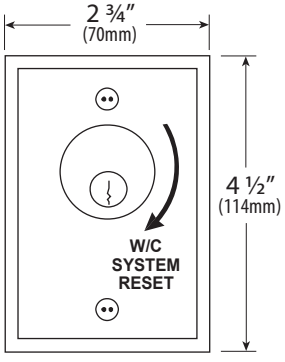

CM-1205/14

CAMDEN DOOR CONTROLS
5502 Timberlea Blvd. Mississauga, ON Canada L4W 2T7 • Toll Free: 1 877 226-3369 (CAMDEN9)
Tel: (905) 366-3377 • Fax: (905) 366-3378 • E-mail: info@camdencontrols.com • www.camdencontrols.com

BSI FS 541752
Certified ISO 9001: 2015

CM-AF540S0

VOLTAGE:	12/30V AC/DC
CURRENT DRAW:	30 - 75MA
CONTACT TYPE:	DPST
CONTACT RATING:	10 AMPS

CM-AF141S0 / CM-AF142S0

VOLTAGE:	12-24V AC/DC
CURRENT DRAW:	CM-AF141S0: 40 - 70 MA CM-AF142S0: 70MA MAX 1 COLOUR 130 MA MAX MULTI-COLOR
SOUNDER:	ADJUSTABLE, 93DB @ 1 METER MAX. (3FEET)
FINISH:	WHITE

CM-8010/13

VOLTAGE:	12/24 VDC
CONTACT TYPE:	N/C SPST
CURRENT RATING:	6A@30V DC
SWITCH TYPE:	MOMENTARY
FINISH:	BRUSHED ALUMINUM

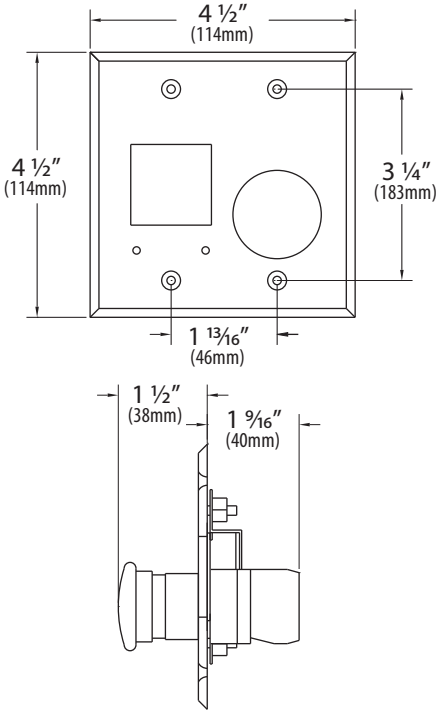

CM-AF540S0

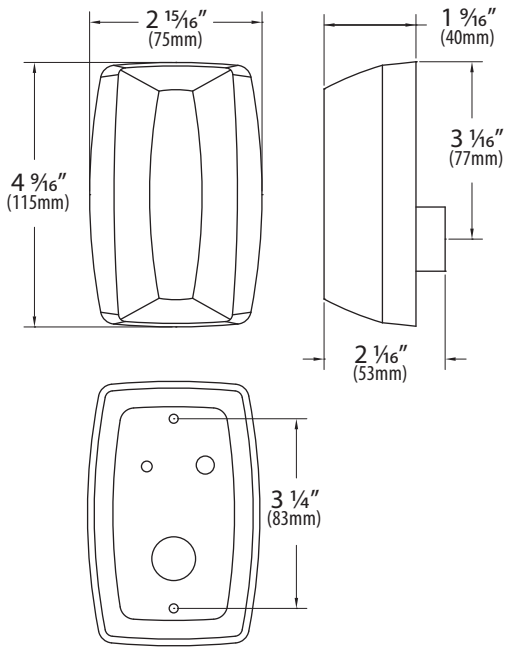

CM-AF141S0 / CM-AF142S0

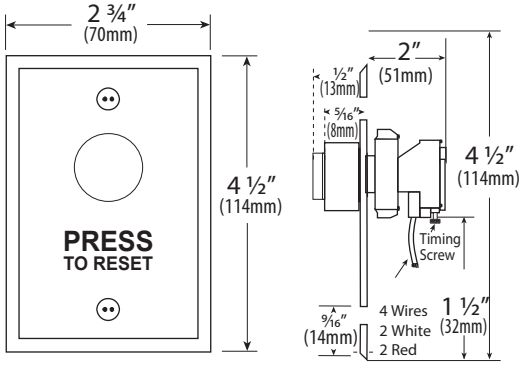

CM-8010/13

ORDERING INFORMATION

EQUIPMENT PACKAGE

CX-WEC10K2 UNIVERSAL RESTROOM KIT WITH DOUBLE GANG SWITCH/ ANNUNCIATOR COMBO. FOR USE WITHOUT AUTOMATIC DOOR OPERATOR, OR WITH CX-WC 10, 11, 12, 13 & 14 BARRIER-FREE RESTROOM CONTROL KIT.

- **CM-AF540SO** 'PRESS FOR EMERGENCY ASSISTANCE' MUSHROOM PUSH BUTTON AND LED ANNUNCIATOR WITH ADJUSTABLE SOUNDER (DOUBLE GANG),
- **CM-AF141SO** LED DOME LIGHT WITH ADJUSTABLE SOUNDER,
- **CM-SE21A** WHITE PANEL SIGN 6" X 10 5/8" (152MM X 270MM)

ADD SUFFIX 'F' TO MODEL NUMBER FOR FRENCH LANGUAGE.



CX-WEC10K2

CX-WEC13 UNIVERSAL EMERGENCY CALL KIT WITH KEY SWITCH RESET. FOR USE WITH MOMENTARY 'PRESS FOR EMERGENCY ASSISTANCE' SWITCHES (EXTRA)

- **CM-AF501SO** LED ANNUNCIATOR/SOUNDER
- **CM-AF141SO** LED DOME LIGHT/SOUNDER
- **CM-SE21** WHITE PANEL SIGN
- **CX-LRS 24V** LATCHING RELAY ASSEMBLY
- **CM-1205/14** MOMENTARY, 'W/C SYSTEM RESET' KEY SWITCH AND
- **CM-1000/60KD**, KEY CYLINDER.

ADD SUFFIX 'F' TO MODEL NUMBER FOR FRENCH LANGUAGE.



CX-WEC13



Camden offers the largest selection of application kits in the industry.
To view our complete listing, visit our website *www.camdencontrols.com*