CX-PS10UL, CX-PS30UL, CX-PS60UL

POWER SUPPLIES

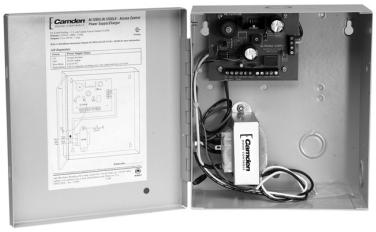

CX-PS10UL

UL LISTED CSA

FEATURES

- LATCHING FIRE ALARM TIE-IN WITH RESET
- DC OUTPUT AND CHARGER SUPERVISION
- DUAL OUTPUT AVAILABLE (12 OR 24V DC)
- RAPID BATTERY CHARGING
- SHORT CIRCUIT PROTECTION
- UL 294 LISTED
- AC POWER AND STATUS INDICATORS
- AC FAIL SUPERVISION
- METAL ENCLOSURE ACCOMMODATES 1 OR 2 BATTERIES

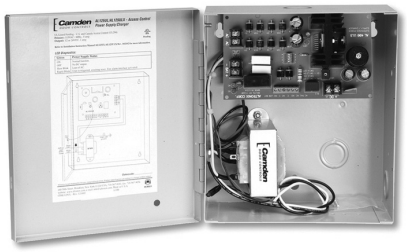

CX-PS30UL & CX-PS60UL

UL LISTED c UL LISTED

DESCRIPTION

Camden Door Controls CX-PS Series power supplies converts 115 VAC/60 Hz input to individually protected 12 or 24V DC outputs at 1.0, 2.5 Amps, or 6 Amps. The built-in battery charging circuits provide 400mA (CX-PS10UL), 600mA (CX-PS30UL) and 700mA (CX-PS60UL). The metal enclosures provide protection for the power supply and are large enough to accommodate 1 or 2 batteries.

APPLICATION

Camden Door Controls CX-PS Series power supplies are ideal for security alarm systems, access control systems, fire alarm systems, door controls, electromagnetic locks and many other applications.

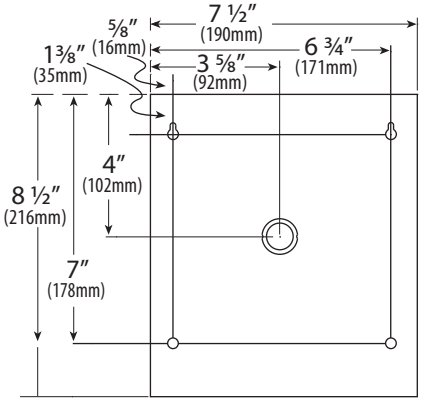

CX-PS10UL

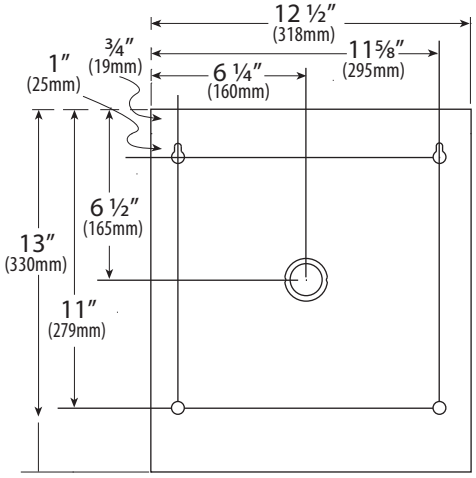

CX-PS30UL & CX-PS60UL

CAMDEN DOOR CONTROLS

5502 Timberlea Blvd. Mississauga, ON Canada L4W 2T7 • Toll Free: 1 877 226-3369 (CAMDEN9)
Tel: (905) 366-3377 • Fax: (905) 366-3378 • E-mail: info@camdencontrols.com • www.camdencontrols.com

SPECIFICATIONS

	CX-PS10UL	CX-PS30UL	CX-PS60UL
OUTPUT:	1 AMP	2.5 AMP	6 AMP
INPUT:	115 VAC		
VOLTAGE:	12/24 VDC OUTPUT		
BATTERY CHARGER:	(400 MA)	(600 MA)	(700 MA)
ENCLOSURE ACCOMMODATES:	ONE 12V DC/7 AH BATTERY OR TWO 12V DC/4 AH BATTERIES		TWO 12V DC/12 AH BATTERIES
ENCLOSURE DIMENSIONS:	8 1/2"H x 7 1/2"W x 3 1/2"D (216mm x 190mm x 89mm)		13"H x 12 1/2"W x 3 1/4"D (330mm x 318mm x 83mm)

ORDERING INFORMATION

MODEL	DESCRIPTION
CX-PS10UL:	1 AMP OUTPUT UL 294, CSA, C22-2 METAL ENCLOSURE ACCOMMODATES BATTERIES LATCHING FIRE ALARM TIE-IN WITH RESET 12 OR 24V DC SELECTABLE AC POWER AND STATUS INDICATORS SHORT CIRCUIT AND TERMINAL PROTECTION
CX-PS30UL & CX-PS60UL:	2.5 AMP OUTPUT (CX-PS30UL), 6AMP OUTPUT (CX-P60UL) UL 294, CSA, C22-2 MULTI-OUTPUT POWER SUPPLY FIRE ALARM & ACCESS CONTROL LATCHING FIRE ALARM TIE-IN WITH RESET TRIGGER CONNECTIONS 5 INDIVIDUAL CIRCUIT BREAKERS PROTECTED OUTPUTS AC FAIL SUPERVISION DC OUTPUT AND CHARGER SUPERVISON