# CX-IRB Isolation Relay




**Camden's CX-IRB Isolation Relay Module provides a compact and economical solution for isolation of devices from electrical noise and induced voltages.**

CX-IRB Isolation Relay Module is ideal for use in any low voltage system, including access control, telephone entry, and automatic doors.



BEST VALUE

BEST QUALITY

Camden's CX-IRB Isolation Relay Module is designed to provide the best performance and value in the industry.

## Features

- Ultra Compact Design fits anywhere, including Automatic Door Operator or Power Supply Cabinets
- Selectable 12/24V DC
- Low Power Consumption
- Heavy Duty Double Pole, Double Throw (DPDT) Relay Contacts
- LED Provides Relay Activation Status
- Self-adhesive Velcro™ tape is provided for easy mounting
- 3 Year Warranty

## SPECIFICATIONS

| | |
|---|---|
| VOLTAGE: | 12/24V DC |
| CURRENT DRAW: | 240mA @ 12V/24 VDC |
| CONTACT RATING: | 8 amps @ 30 VDC/120 VAC |
| CONTACT TYPE: | DPDT |
| STATUS: | Red LED (Activated when on) |
| TEMPERATURE: | -40°F to 158°F (-40°C to 70°C) |
| DIMENSIONS: | 3/4" H x 1 1/2" W x 2 3/4" L (20mm x 38mm x 70mm) |

## ORDERING INFORMATION

| | |
|---|---|
|  | **CX-IRB**<br>Isolation Relay Module, 12/24V DC |
|  X 6 | **CX-IRB-6**<br>Isolation Relay Module, Package of 6, 12/24V DC |

## DIMENSIONS

**Small footprint (1 1/2" x 2 3/4") offers installation flexibility.**

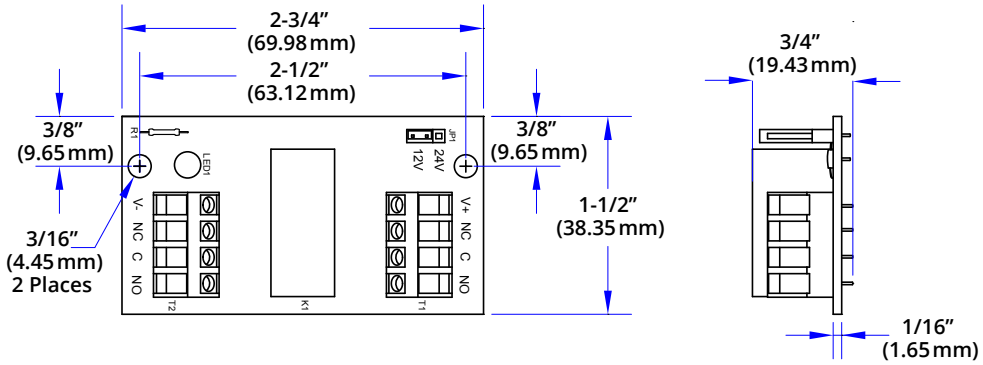





5502 Timberlea Blvd. Mississauga, ON Canada L4W 2T7 • Toll Free: 1 877 226-3369 (CAMDEN9)
Tel: (905) 366-3377 • Fax: (905) 366-3378 • E-mail: info@camdencontrols.com • www.camdencontrols.com



BSI Certified ISO 9001: 2015
FS 541752

Part #: MKTG-LIT-SP-IRB