CX-EMF-2 Multi-Function Relay



Camden's CX-EMF-2 Multi-Function Relay is a microprocessor-controlled relay designed to easily and quickly handle a variety of specialized door-control tasks.

This smart new design allows for future development by utilizing expandable technology and reprogrammable IC 's.

All wiring connections and adjustments are made on the exterior of the plastic case with removable terminals to facilitate installation. Simple yet effective potentiometers enable settings to meet varied requirements.

A power LED, 1 status LED, and five relay LEDs aid in set-up and troubleshooting.

Also available is the option of a metal cabinet with lighted control switches.



BEST VALUE

BEST QUALITY

Camden's CX-EMF-2 Multi-Function Relay Module is designed to provide the best performance and value in the industry.

Features

- Microprocessor Control
- User Selectable Multi-Application Design
- Plug-in Connectors for Wiring
- Accepts up to 7 Dry Inputs
- 5 Form 'C', 3 Amp Relay Outputs
- 12/24V AC/DC Operation
- 3 Year Warranty

SPECIFICATIONS

VOLTAGE:	12/24V AC/DC
CURRENT DRAW:	150mA @ nominal 500mA @ maximum
RESPONSE TIME:	0.3 seconds
MODE SELECTOR:	via 3 dipswitches
INPUTS:	7 Dry Contacts, 1 Digital Input
OUTPUTS:	5 SPDT Relays, 1 Digital Output
FIRMWARE:	Version A1-001
CONTACT RATING:	3 Amps @ 20 VDC
TIME DELAYS:	5 pots, adjustable 1 - 30 seconds (depending on mode)
ELECTRICAL LIFE:	100,000 operations @ rated or 500,000 operations @ 1/2 rated capacity
MOUNTING:	EMF-2: Double-sided foam tape or (2) #6 screws EMF-2M & EMF-2ABM: 4 x Metal screws & anchors
ENCLOSURE:	EMF-2: Formed Plastic Housing EMF-2M & EMF-2ABM: Beige Metal Cabinet
DIMENSIONS:	EMF-2: 3" W x 7" H x 7/8" D (76 mm x 178 mm x 22 mm) EMF-2M & EMF-2ABM: 7-1/2" W x 12" H x 3-3/4" D (191 mm x 305 mm x 95 mm)

ORDERING INFORMATION



CX-EMF-2
Relay Supplied in Sturdy Gray Plastic Case



CX-EMF-2M
Relay Supplied in Lockable Beige Metal Cabinet with Illuminated On/Off Switch for Door Status



CX-EMF-2ABM
Relay Supplied in Lockable Beige Metal Cabinet with Two Illuminated On/Off Switches for Door Status



CX-MDC
One Set of Magnetic Door Contacts. Used in Man-Trap and Restroom Door Applications

TERMINALS

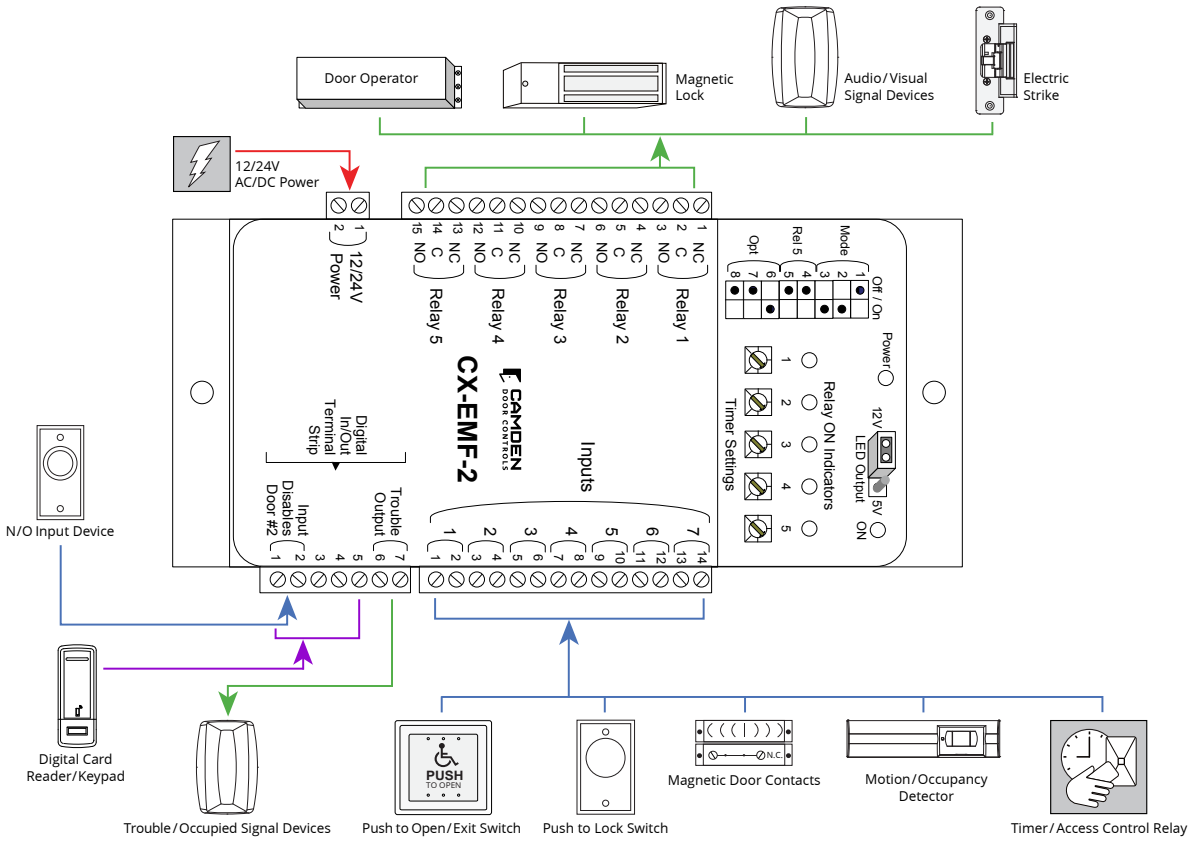

CAMDEN DOOR CONTROLS
Opening New Doors to Innovation, Quality and Support!

5502 Timberlea Blvd. Mississauga, ON Canada L4W 2T7 • Toll Free: 1 877 226-3369 (CAMDEN9)
Tel: (905) 366-3377 • Fax: (905) 366-3378 • E-mail: info@camdencontrols.com • www.camdencontrols.com

BSI Certified ISO 9001: 2015
FS 541752
Part #: MKTG-LIT-SP-CX-EMF2