SECURITY UL LISTED UL 1034 UL 294

c UL us LISTED UL10C/ CAN4-S104, 3hr. Fire rating

CX-ED1579L

'ALL IN ONE' FIRE RATED ELECTRIC STRIKE

GRADE 1



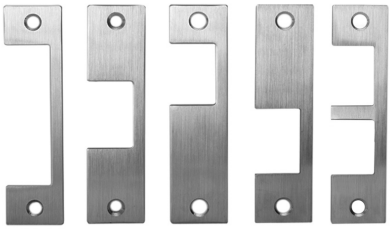

CX-ED1579L AND STAINLESS STEEL FACEPLATES

FEATURES

- FOR MORTISE AND CYLINDRICAL LOCKSETS
- 3/4" (19MM) LATCH PROJECTION (THROW)
- SELECTABLE FAIL SAFE/FAIL SECURE OPERATION
- SELECTABLE 12/24V AC/DC
- LATCH MONITORING
- NON-HANDED, LH/LR
- EASY FIT CONNECTORS FOR POWER AND MONITORING WIRES
- STAINLESS STEEL STRIKE BODY
- 5 YEAR WARRANTY

DESCRIPTION

Camden CX-ED1579L Grade 1 electric strike for mortise and cylindrical locksets offers the very best strike quality and features, with the added value of built-in latch monitoring, five stainless steel faceplates and 'Universal' performance, including field selectable voltage and fail safe/fail secure operation.

DIMENSIONS

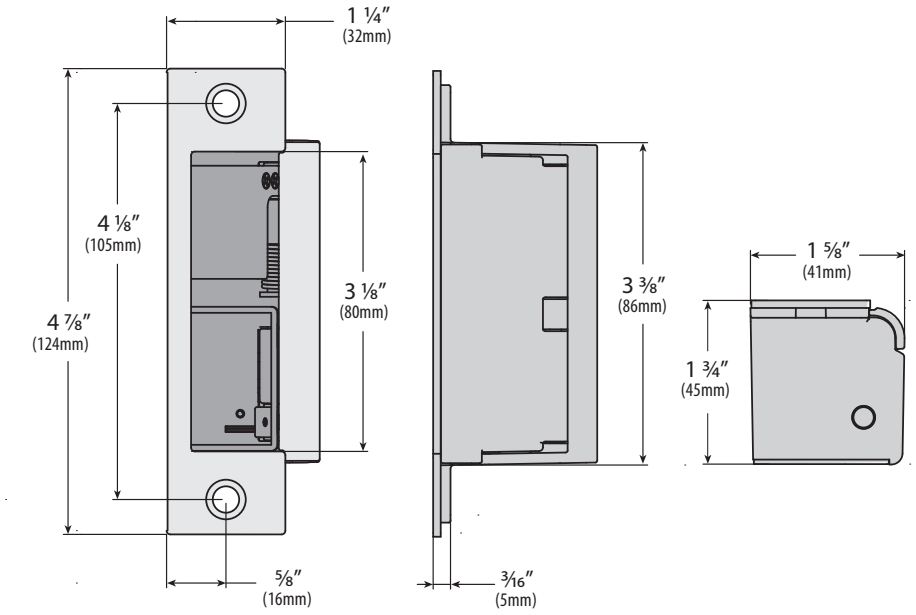

DOOR FRAME TYPES



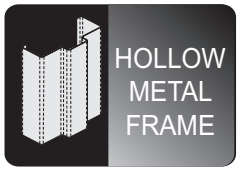

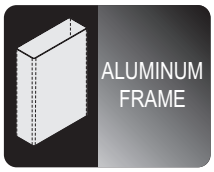

COMPATIBLE LOCKSETS



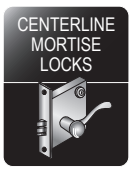

CAMDEN DOOR CONTROLS

5502 Timberlea Blvd. Mississauga, ON Canada L4W 2T7 • Toll Free: 1 877 226-3369 (CAMDEN9)
Tel: (905) 366-3377 • Fax: (905) 366-3378 • E-mail: info@camdencontrols.com • www.camdencontrols.com

SPECIFICATIONS

VOLTAGE:	12/24V AC/DC
CURRENT DRAW:	260MA @ 12V AC/DC, 150MA @ 24V AC/DC
STATIC FORCE:	1,500 LBS.
DYNAMIC FORCE:	70 FT-LBS.
MODE:	FAIL-SAFE/FAIL-SECURE, FIELD SELECTABLE
OPERATION:	AC - BUZZ, DC - SILENT
DUTY:	CONTINUOUS (DC)
MOUNTING:	NON-HANDED
ENDURANCE:	1,500,000 CYCLES (FACTORY TESTED) 250,000 CYCLES (UL VERIFIED)
FIRE RATING:	UL10C/CAN4-S104, 3 HRS. (FAIL SECURE ONLY)
LATCH BOLT MONITOR:	SPDT, 100MA @ 24V DC
DIMENSIONS:	BODY: 4 7/8"L x 1 1/4"W x 1 3/4"D (124mm x 32mm x 45mm)

ORDERING INFORMATION

CX-ED1579L:	GRADE 1 'ALL IN ONE' FIRE RATED STRIKE, 12/24V AC/DC, FOR MORTISE AND CYLINDRICAL LOCKSETS

FACEPLATES

INCLUDED IN PACKAGE

MODEL	DESCRIPTION
CX-EMP-1	Stainless faceplate for Sargent, Schlage & Yale Mortise Locksets
CX-EMP-2	Stainless faceplate for Arrow, Corbin, & Best mortise locksets
CX-EMP-3	Stainless faceplate for centerline mortise or cylindrical locksets
CX-EMP-4	Stainless faceplate for mortise locksets with deadbolt
CX-EMP-5	Stainless faceplate all Mortise locks that include both latch & deadbolt

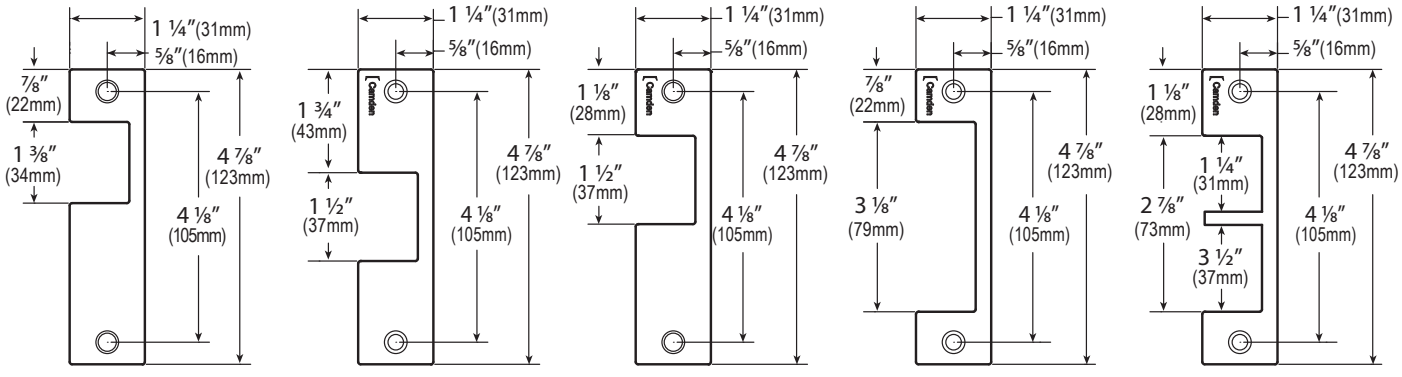

CX-EMP-1 **CX-EMP-2** **CX-EMP-3** **CX-EMP-4** **CX-EMP-5**

CUTTING JIGS

CX-JIG6: FOR CX-ED1579L STRIKE, ANSI FACE PLATE CX-EMP-3