

SECURITY
UL 1034
UL 294
LISTED

# CX-ED1079 SERIES

## 'UNIVERSAL' LOW & STANDARD PROFILE ELECTRIC STRIKES

GRADE 1



CX-ED1079 AND STAINLESS STEEL FACEPLATES

## FEATURES

- COMPATIBLE WITH CENTERLINE CYLINDRICAL AND MORTISE LOCKSETS
- **CX-ED1079:** SHALLOW DEPTH, 1/2"-5/8"(13mm - 16mm)
- **CX-ED1079L:** AS ABOVE, WITH LATCH MONITORING
- **CX-ED1079D:** EXTENDED DEPTH, 5/8"-3/4"(16mm - 19mm)
- **CX-ED1079DL:** AS ABOVE, WITH LATCH MONITORING
- FIELD SELECTABLE FAIL SECURE/FAIL SAFE
- DUAL VOLTAGE 12/24V, AC OR DC
- ADJUSTABLE STRIKE BODY
- 3 STAINLESS STEEL FACEPLATES PROVIDED:
  - **ANSI SQUARE** 4 7/8" x 1 1/4" (123mm x 32mm)
  - **HOLLOW METAL DOOR** 6 7/8" x 1 1/4" (173mm x 32mm)
  - **WOOD DOOR** 7 7/8" x 1 3/8" (200mm x 36mm)
- CONTINUOUS DUTY OPERATION
- NON-HANDED
- EASY FIT CONNECTORS FOR POWER & MONITORING WIRES
- TRIM PLATE PROVIDED
- 5 YEAR WARRANTY

## DESCRIPTION

**Camden CX-ED1079 Series** low profile, for 5/8" latch projection) and CX-ED1079D (standard depth, for 3/4" latch projection) 'Universal' grade 1 ANSI strikes offer 'universal' performance with selectable 12/24V AC/DC and fail safe/fail secure operation, and have horizontal faceplate/body adjustment.

## DIMENSIONS

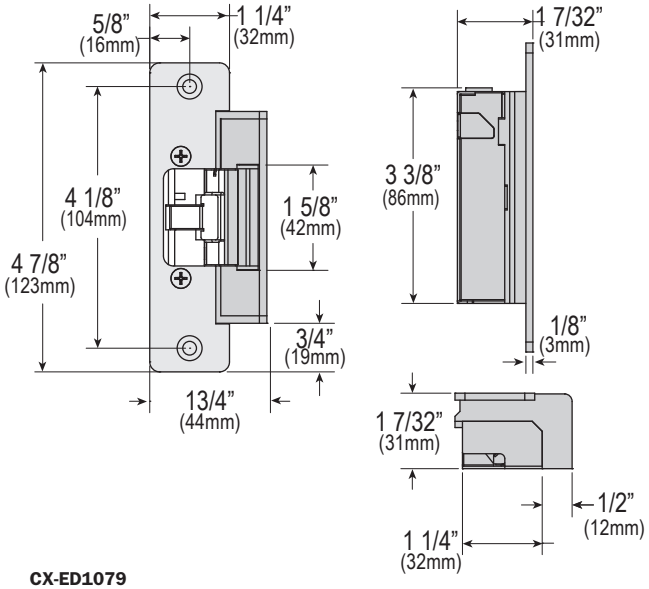


CX-ED1079

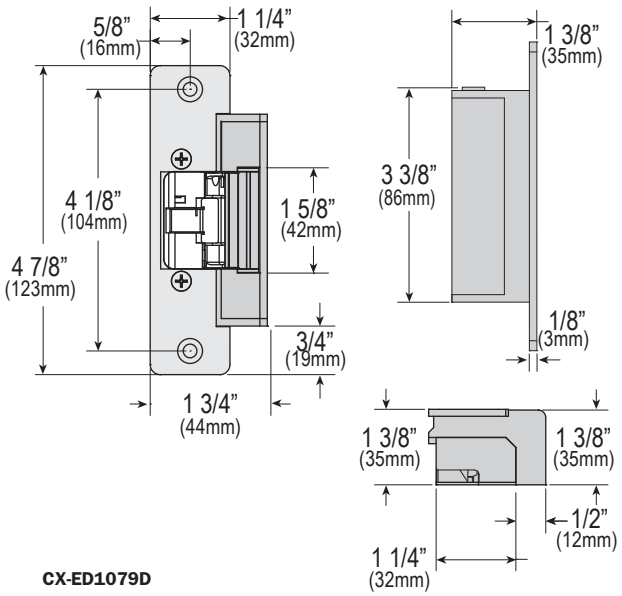


CX-ED1079D



CAMDEN DOOR CONTROLS

5502 Timberlea Blvd. Mississauga, ON Canada L4W 2T7 • Toll Free: 1 877 226-3369 (CAMDEN9)
Tel: (905) 366-3377 • Fax: (905) 366-3378 • E-mail: info@camdencontrols.com • www.camdencontrols.com

# CX-ED1079 SERIES ELECTRIC STRIKES

## DOOR FRAME TYPES




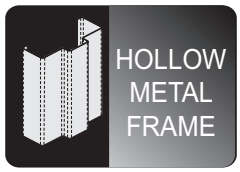


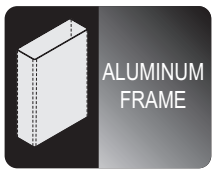


## COMPATIBLE LOCKSETS







## SPECIFICATIONS

| | |
|---|---|
| VOLTAGE: | 12/24V AC/DC |
| CURRENT DRAW: | 260mA@12V DC, 150mA@24V DC |
| STATIC HOLD FORCE: | 1,500 LBS. |
| DYNAMIC STRENGTH: | 70 FT-LBS. |
| ENDURANCE: | 1,000,000 CYCLES (FACTORY TESTED) 250,000 CYCLES (UL VERIFIED) |
| MODE: | FIELD SELECTABLE FAIL SAFE/FAIL SECURE |
| MECHANICAL ADJUSTMENT: | STRIKE BODY |
| OPERATION: | AC – BUZZ, DC – SILENT |
| LATCH MONITOR: | LATCH BOLT |
| DUTY: | CONTINUOUS |
| DIMENSIONS (BODY): | |
| CX-ED1079: | 3 3/8"L x 1 3/4"W x 1 7/32"D (86mm x 44mm x 31mm) |
| CX-ED1079D: | 3 3/8"L x 1 3/4"W x 1 3/8"D (86mm x 44mm x 35mm) |

## ORDERING INFORMATION

**CX-ED1079:** LOW PROFILE GRADE 1 'UNIVERSAL' ELECTRIC STRIKE, 12/24V AC/DC, FAIL SAFE/FAIL SECURE OPERATION, HORIZONTAL ADJUSTMENT, AND 3 STAINLESS STEEL FACEPLATES (CX-ESP1B, CX-ESP3B & CX-ESP4B)

**CX-ED1079L:** AS ABOVE, WITH LATCH MONITORING

**CX-ED1079D:** STANDARD DEPTH GRADE 1 'UNIVERSAL' ELECTRIC STRIKE, 12/24V AC/DC, FAIL SAFE/FAIL SECURE OPERATION, HORIZONTAL ADJUSTMENT, AND 3 STAINLESS STEEL FACEPLATES (CX-ESP1B, CX-ESP3B & CX-ESP4B)

**CX-ED1079DL:** AS ABOVE, WITH LATCH MONITORING

## FACEPLATES

**INCLUDED IN PACKAGE**

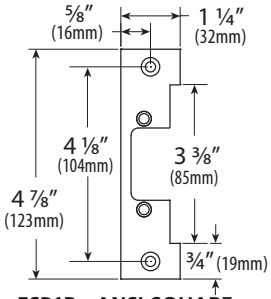


**ESP1B - ANSI SQUARE**
**4 7/8" x 1 1/4"**

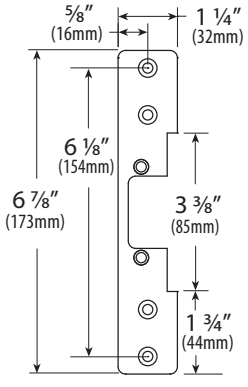


**ESP3B - HOLLOW METAL DOOR**
**6 7/8" x 1 1/4" - STAINLESS STEEL**

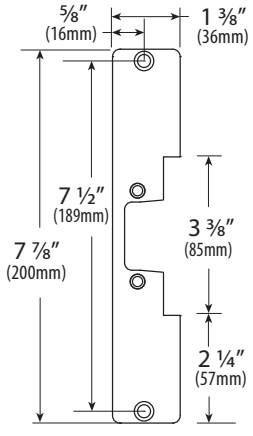


**ESP4B - WOOD DOOR**
**7 7/8" x 1 3/8"**

**ADDITIONAL FACEPLATE**

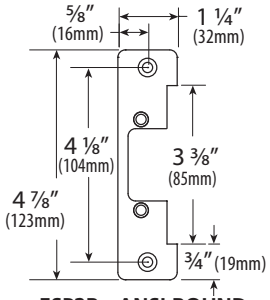


**ESP2B - ANSI ROUND**
**4 7/8" x 1 1/4"**

## CUTTING JIGS

**CX-JIG1:** FOR CX-ED1079L STRIKE, ANSI ROUND FACEPLATE (CX-ESP2B)

**CX-JIG2:** FOR CX-ED1079L STRIKE, HOLLOW METAL DOOR FACEPLATE (CX-ESP3B)

**CX-JIG3:** FOR CX-ED1079DL STRIKE, ANSI ROUND FACEPLATE (CX-ESP2B)

**CX-JIG4:** FOR CX-ED1079DL STRIKES, HOLLOW METAL DOOR FACEPLATE (CX-ESP3B)

**CX-JIG5:** FOR CX-ED1079L/DL STRIKES, ANSI & HOLLOW METAL DOOR FACEPLATES

## LIP EXTENSION BRACKETS

**CX-ED-LIP1:**
1" LIP EXTENSION FOR ANSI STRIKES (STACKABLE)

**CX-ED-LIP2:**
2" LIP EXTENSION FOR ANSI STRIKES




**CX-JIG1**



**CX-ED-LIP1**

CAMDEN DOOR CONTROLS
5502 Timberlea Blvd. Mississauga, ON Canada L4W 2T7 • Toll Free: 1 877 226-3369 (CAMDEN9)
Tel: (905) 366-3377 • Fax: (905) 366-3378 • E-mail: info@camdencontrols.com • www.camdencontrols.com

MKTG-LIT-SP-ED1079-R10

BSI FS 541752 Certified ISO 9001: 2015