# CX-DA 100/200/300 SERIES

## DOOR PROP ALARMS




CX-DA100




CX-DA200




CX-DA300

## FEATURES

- LOCAL AUDIBLE ALARM OF DOOR OPEN STATUS
- HEAVY DUTY STAINLESS STEEL FACEPLATE
- SINGLE AND DOUBLE GANG MODELS
- CX-DA100 SINGLE GANG SOUNDER IDEAL FOR WIDE RANGE OF ALARM APPLICATIONS
- CX-DA200 AND CX-DA300 FEATURE ADJUSTABLE 0 - 60 SECOND ALARM TIME DELAY AND RELAY OUTPUT
- CX-DA300 DOUBLE GANG DOOR ALARM FEATURES KEY SWITCH FOR LOCAL RESET OR BYPASS

## DESCRIPTION

**Camden CX-DA Series** door alarms feature a rugged design with heavy duty stainless steel faceplates, and provide an affordable and easy to implement solution to the common issue of doors being used, propped or held open without alerting facility or security staff.

## APPLICATION

CX-DA100 door alarms provide a 95 dB audible alarm, when energized by 12 – 24 VDC power. In door control applications, power is supplied to the CX-DA100 when a magnetic door contact closes the circuit.

CX-DA200 and CX-DA300 door alarms are 12/24V AC/DC powered and provide an 80 dB. audible alarm upon activation. There is an input for a N/C magnetic door contact and a N/C SPST contact output, for connection to a (remote) signal or annunciation device. A 0 - 30 second adjustable timer provides an alarm activation delay.

The CX-DA300 also provides an alarm bypass key switch, with LED indicator.

## ARCHITECTS/ENGINEERS SPECIFICATION

Door alarms to be used throughout the site/complex shall be manufactured by Camden Door Controls, and feature brushed stainless steel faceplates for flush mounting on single or double gang electrical boxes. The door alarms are to be designed for stand-alone operation with a N/C alarm contact output, for connection to a (remote) signal or annunciation device. The door alarm shall have an input for a N/C door contact and 0 - 30 second adjustable timer. Where noted, the door alarm shall have an alarm bypass key switch, with LED indicator.





5502 Timberlea Blvd. Mississauga, ON Canada L4W 2T7 • Toll Free: 1 877 226-3369 (CAMDEN9)
Tel: (905) 366-3377 • Fax: (905) 366-3378 • E-mail: info@camdencontrols.com • www.camdencontrols.com

## SPECIFICATIONS

| | |
|---|---|
| VOLTAGE: | **CX-DA100:** 12 - 24 VDC<br>**CX-DA-200/300:** 12/24V AC/DC |
| CURRENT DRAW: | **CX-DA100:** 18 MA<br>**CX-DA-200/300:** 70MA |
| INPUT: | **CX-DA-200/300:** (1) N/C |
| OUTPUT: | **CX-DA-200/300:** (1) N/C SPST |
| CONTACT RATING: | **CX-DA-200/300:** 500 MA @ 30 VDC |
| SOUNDER: | **CX-DA100:** 95 DB.<br>**CX-DA-200/300:** 80 DB. |
| ALARM DELAY TIME: | 0-60 SECONDS (CX-DA200 & CX-DA300) |
| DIMENSIONS: | **CX-DA100:** 4 1/2"H x 2 3/4"W x 3/4"D (114mm x 70mm x 20mm)<br>**CX-DA200:** 4 1/2"H x 2 3/4"W x 1 1/2"D (114mm x 70mm x 38 mm)<br>**CX-DA-300:** 4 1/2"H x 4 1/2"W x 1 1/2"D (114mm x 114mm x 38mm) |

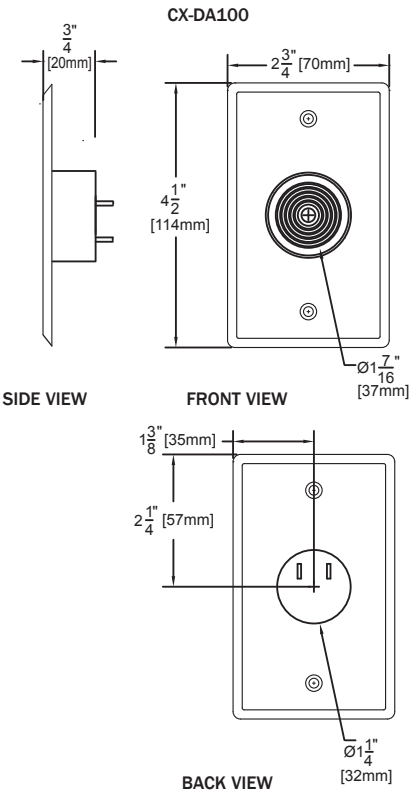


## ORDERING INFORMATION

| | |
|---|---|
| CX-DA100: | DOOR ALARM, SOUNDER, SINGLE GANG, 12-24 VDC |
| CX-DA200: | DOOR ALARM, WITH RELAY, SINGLE GANG, 12/24V, AC/DC |
| CX-DA300: | DOOR ALARM, WITH RELAY AND RESET KEY, DOUBLE GANG, 12/24V, AC/DC |

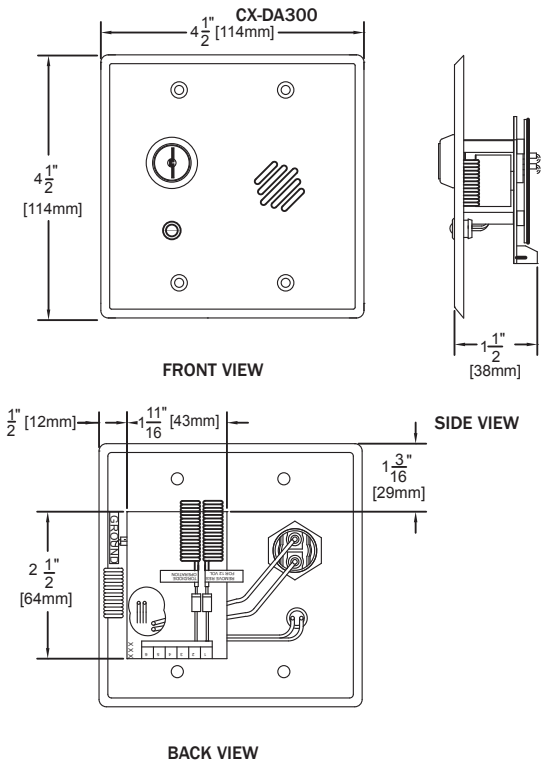


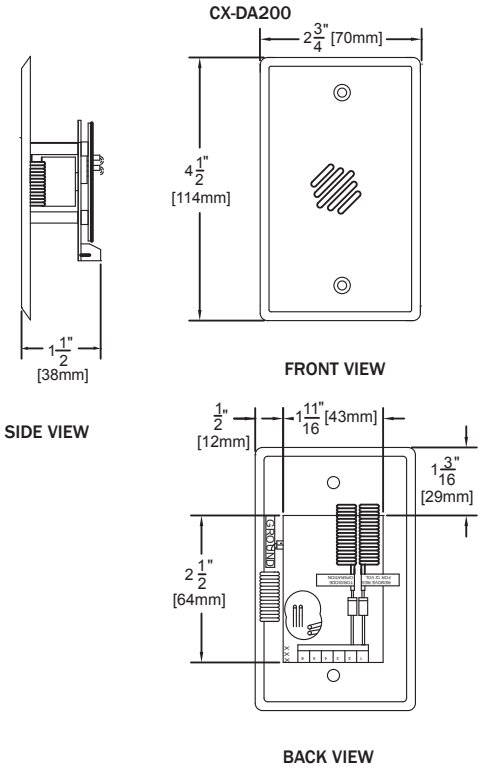


CAMDEN DOOR CONTROLS
5502 Timberlea Blvd. Mississauga, ON Canada L4W 2T7 • Toll Free: 1 877 226-3369 (CAMDEN9)
Tel: (905) 366-3377 • Fax: (905) 366-3378 • E-mail: info@camdencontrols.com • www.camdencontrols.com

Certified ISO 9001: 2008
FS 541752