CX-DA400 SERIES

DOOR MONITOR ALARM



CX-DA400

FEATURES

- STAND ALONE OPERATION OR INTERFACE WITH ACCESS CONTROL SYSTEM
- HEAVY DUTY STAINLESS STEEL FACEPLATE
- 12-24 V AC/DC
- ADJUSTABLE ALARM TIMING AND ALARM DELAY
- SELECTABLE 'HIGH' OR 'LOW' LEVEL SOUNDER
- RESET/BYPASS KEY SWITCH AND REMOTE INPUT
- VISUAL STATUS INDICATOR
- FUNCTIONS INCLUDE SHUNT RECYCLE, SHUNT DELAY, DOOR SUPERVISION AND INTRUSION DETECTION
- CX-DA401 INCLUDES TAMPER SWITCH FEATURE

DESCRIPTION

CX-DA-400 double gang door monitor alarm features a rugged stainless steel faceplate, 4 inputs, 5 outputs and has a range of adjustable time delay functions. It is designed to complement any access control system by providing prop/door held open and intrusion/door forced open detection, as well as local alarm and reset.

APPLICATION

Camden Door Controls CX-DA400 Series door monitor alarms are ideal for applications requiring local alarm notification of intrusion or door forced open, as well as door held open, either stand alone or as part of an access control system.

CX-DA400 Series door monitor alarms provide a loud 103 dB or 96 dB. audible warning with door supervision/status and a key switch alarm bypass. The voltage sensing feature monitors power on an electric lock, recognizing a change in voltage as a valid user.

Inputs include N/O or N/C Alarm Shunt, N/C Door Contact, N/O Remote Reset/ Bypass and Voltage Sense Shunt. Outputs include N/O and N/C Door Contact Status, N/O and N/C Door Prop Alarm Status, N/O and N/C Intrusion/Tamper Alarm Status, N/O and N/C Bypass/Key switch Status and Remote LED. There are three adjustable timers; auto reset 0 sec. -5 min. /manual, alarm delay 0 sec. – 5 min./infinite, and silent time 0 sec. – 90 min.

ARCHITECTS/ENGINEERS SPECIFICATION

Door monitor alarms to be used throughout the site/complex shall be Camden door monitor alarms, with brushed stainless steel faceplates, flush mounted on double gang electrical boxes. The door monitor alarms are to be designed for stand-alone operation or interconnected with an access control system. They shall have four Inputs, including N/O or N/C Alarm Shunt, N/C Door Contact, N/O Remote Reset/Bypass and Voltage Sense Shunt. The door monitor alarm shall also provide five outputs, including N/O and N/C Door Contact Status, N/O and N/C Door Prop Alarm Status, N/O and N/C Intrusion/Tamper Alarm Status, N/O and N/C Bypass/Key switch Status and Remote LED. The unit shall also have three adjustable timers; auto reset 0 sec. -5 min. /manual, alarm delay 0 sec. – 5 min./infinite, and silent time 0 sec. – 90 min. The audible sounder shall be selectable 103 dB or 96 dB.

5502 Timberlea Blvd. Mississauga, ON Canada L4W 2T7 • Toll Free: 1 877 226-3369 (CAMDEN9)
Tel: (905) 366-3377 • Fax: (905) 366-3378 • E-mail: info@camdencontrols.com • www.camdencontrols.com

SPECIFICATIONS

VOLTAGE:	12-24V AC/DC
CURRENT DRAW:	250 MA
INPUT:	N/O OR N/C ALARM SHUNT N/C DOOR CONTACT N/O REMOTE RESET/BYPASS VOLTAGE SENSE SHUNT
OUTPUT:	N/O AND N/C DOOR CONTACT STATUS N/O AND N/C DOOR PROP ALARM STATUS N/O AND N/C INTRUSION/TAMPER ALARM STATUS N/O AND N/C BYPASS/KEY SWITCH STATUS REMOTE LED
CONTACT RATING:	FORM 'C', 1 AMP
TIME DELAY:	AUTO RESET: 0 SEC. -5 MIN. /MANUAL ALARM DELAY: 0 SEC. – 5 MIN./INFINITE SILENT TIME: 0 SEC. – 90 MIN.
SOUNDER:	HIGH – 103 DB@ 3 FT.
	LOW – 96 DB@ 3 FT.
DIMENSIONS:	4 1/2"H x 4 1/2"W x 2 1/2"D (114mm x 114mm x 63mm)

ORDERING INFORMATION

CX-DA400:	DOOR ALARM WITH RELAYS, TIMERS, RESET KEY, DOUBLE GANG, 12-24V AC/DC
CX-DA401:	DOOR ALARM, WITH RELAYS, TIMERS, RESET KEY AND TAMPER, DOUBLE GANG, 12-24V AC/DC

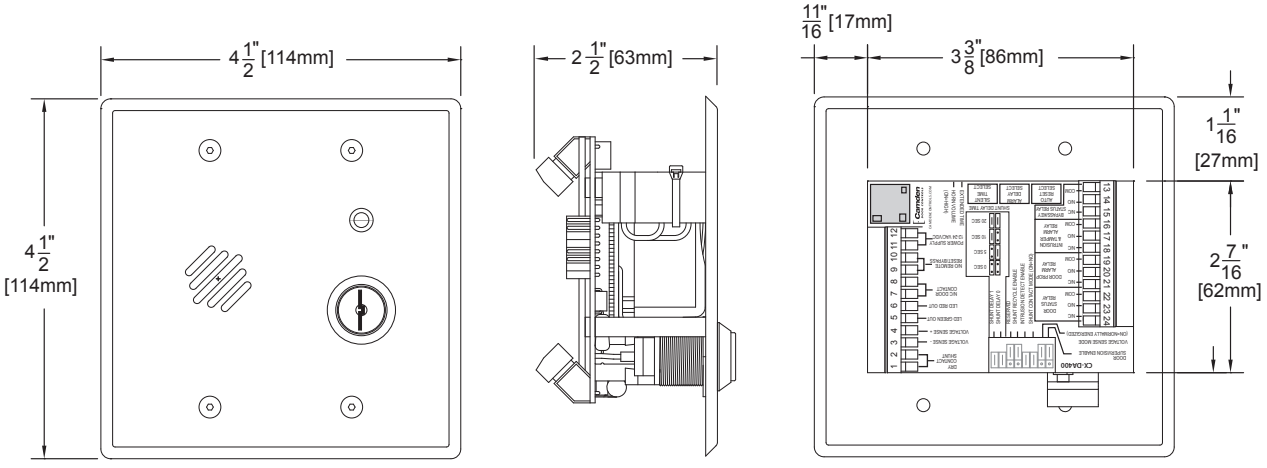

FRONT VIEW SIDE VIEW BACK VIEW

CAMDEN DOOR CONTROLS
5502 Timberlea Blvd. Mississauga, ON Canada L4W 2T7 • Toll Free: 1 877 226-3369 (CAMDEN9)
Tel: (905) 366-3377 • Fax: (905) 366-3378 • E-mail: info@camdencontrols.com • www.camdencontrols.com

MKTG-LIT-SP-DA400

Certified ISO 9001: 2008
FS 541752