CX-93M-12LS

SHEAR LOCK

LIFETIME WARRANTY



CX-93M-12LS



CONTROL BOARD

FEATURES

- COMPATIBLE WITH ALL ACCESS AND EGRESS SYSTEMS
- RUGGED AND COMPACT DESIGN
- STAINLESS STEEL CONSTRUCTION
- SELECTABLE 12/24 VDC
- SELECTABLE 3 TO 12 SECOND TIMER
- BOND SENSOR OUTPUT (FORM C)

DESCRIPTION

Camden CX-93M-12LS shear lock is designed for swinging doors, where the lock can be mortised into the door and frame. The CX-93M-12LS has a remarkably low current draw, while providing 1,200 lbs. of holding force. The shear lock features stainless steel construction and is backed by a lifetime warranty.

APPLICATION

CX-93M-12LS shear locks are ideal for exterior and interior swing doors where the use of a traditional electric strike or magnetic lock would be unattractive, impractical or prohibitively difficult. The shear lock and armature assemblies are recessed (mortised) into the door and the door frame, providing an unobtrusive high security locking solution.

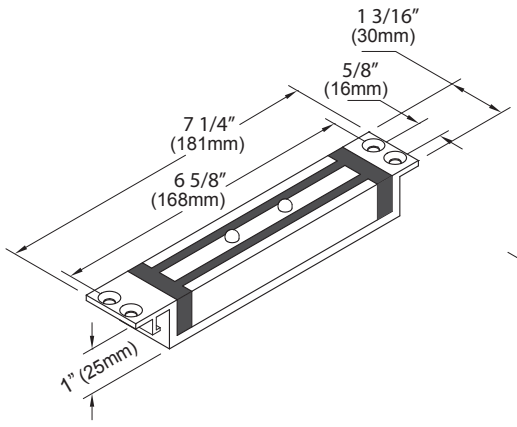

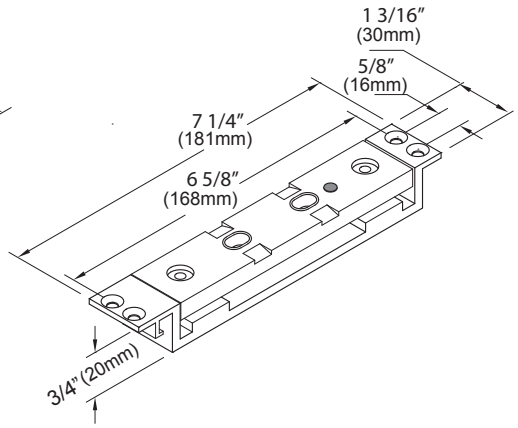

SPECIFICATIONS

SHEAR HOLDING FORCE:	UP TO 1,200LBS. (545KG)
VOLTAGE INPUT:	12 VDC / 24 VDC
CURRENT DRAW:	310mA @12V DC 180mA @24V DC
LOCK AND ARMATURE GAP:	5/64" (2MM))
OPERATING TEMP:	-4°F TO 122°F (-20°C TO +50°C)
DOOR MONITOR CONTACT RATING:	0.5A@28V DC
LOCK DIMENSIONS:	1 3/8" H X 7 1/4" W X 1" D (35mm X 184mm X 25mm)
CONTROL BOARD:	2 1/2" H X 1 1/16" W (61mm X 27mm)
ARMATURE DIMENSIONS:	7 1/4" H X 1 3/16" W X 3/4" D (181mm X 30mm X 20mm)

ORDERING INFORMATION

MODEL	DESCRIPTION
CX-93M-12LS:	1,200 LBS. SHEAR LOCK, MORTISE MOUNT, WITH BOND SENSOR

CAMDEN DOOR CONTROLS
5502 Timberlea Blvd. Mississauga, ON Canada L4W 2T7 • Toll Free: 1 877 226-3369 (CAMDEN9)
Tel: (905) 366-3377 • Fax: (905) 366-3378 • E-mail: info@camdencontrols.com • www.camdencontrols.com
MKTG-LIT-SP-93M12LS Rev1
BSI FS 541752
Certified ISO 9001: 2008