CX-92 Series
600 lbs. & 1200 lbs. Double Door Magnetic Locks

SECURITY UL LISTED
UL 1034 / UL 294
Standard for
Burglary-Resistant
Electric Locking
Mechanisms

cUL
ULC S533-15
Standard for
Access and Egress



600 lbs.

1200 lbs.



BEST VALUE

BEST QUALITY

CX-92 Series 600 lbs. & 1200 lbs. Double Door Magnetic Locks offer the best performance and value.

A 'TDS' option provides an adjustable timer, lock sensor, door status switch, relay and LED.

Camden's Magnetic Locks are easily installed. A metal mounting template is packaged with the unit.

Vandal resistant construction is built to last - lifetime warranty!

Features

- Weather and vandal resistant construction proven over thousands of installations
- Compatible with all access / egress systems
- Field selectable 12/24 VDC operation
- On board MOV power surge protection prevents damage to the magnetic lock
- A range of mounting brackets and spacers available

LIFETIME WARRANTY

SPECIFICATIONS

VOLTAGE: 480mA @ 12 VDC, 240mA @ 24 VDC

CURRENT DRAW: **CX-92S-06:** 480mA / 12 VDC | 240mA / 24 VDC x 2
TDS: 510mA / 12 VDC | 285mA / 24 VDC x 2

CX-92S-12: 420mA / 12 VDC | 210mA / 24 VDC x 2
TDS: 500mA / 12 VDC | 265mA / 24 VDC x 2

CONTACT RATING: TDS models only:
Bond Sensor: 2A @ 24 VDC
Door Status Switch: 0.5A @ 28V AC/DC

HOLDING FORCE: CX-91S-06 : 600 LBS. (272 KG.) | CX-91S-12 : 1200 LBS. (544 KG.)

TEMP. RANGE: 32°F - 131°F (0°C to 55°C)

DIMENSIONS: **Body:**

CX-92S-06: 19-3/4"W x 1-5/8"H x 1-1/8"D
(500mm x 42mm x 27mm)

CX-92S-12: 21"W x 2-5/8"H x 1-9/16"D
(532mm x 67mm x 40mm)

Armature Plate:

CX-92S-06: 2 x 7-1/4"W x 1-1/2"H x 15/32"D
2 x (185mm x 38mm x 12mm)

CX-92S-12: 2 x 7-9/32"W x 3"H x 5/8"D
2 x (185mm x 61mm x 16.5mm)

ORDERING INFORMATION

CX-92S-06	600 lbs. Surface Mount Double Door - Basic
CX-92S-06TDS	600 lbs. Surface Mount Double Door - with adjustable timer, door status switch, lock sensor, relay and LED
CX-92S-12	1200 lbs. Surface Mount Double Door - Basic
CX-92S-12TDS	1200 lbs. Surface Mount Double Door - with adjustable timer, door status switch, lock sensor, relay and LED

DIMENSIONS

CX-92S - 600 lbs.

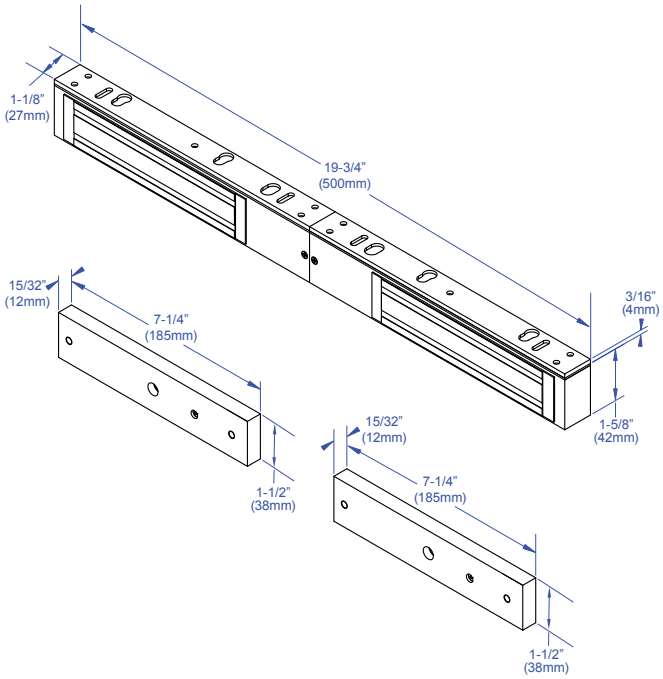

CX-92S - 1200 lbs.

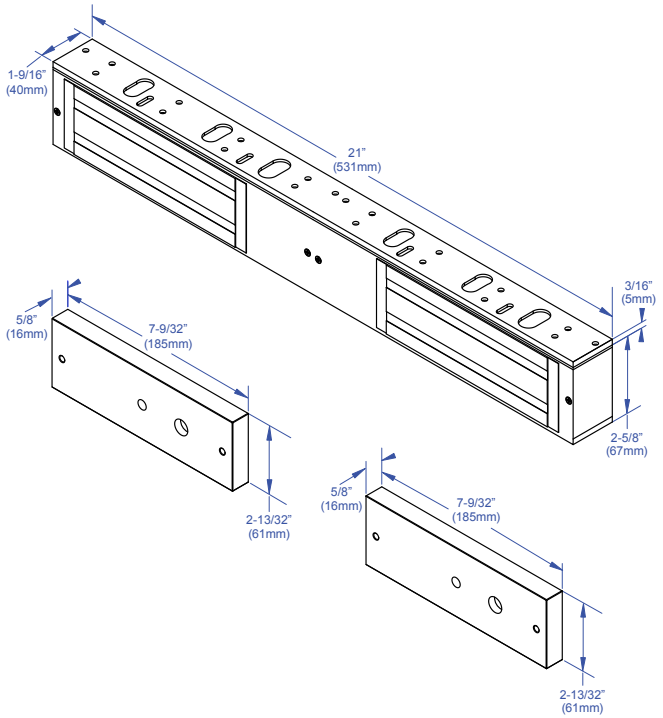

CAMDEN DOOR CONTROLS

Opening New Doors to
Innovation, Quality and Support!

5502 Timberlea Blvd. Mississauga, ON Canada L4W 2T7 • Toll Free: 1 877 226-3369 (CAMDEN9)
Tel: (905) 366-3377 • Fax: (905) 366-3378 • E-mail: info@camdencontrols.com • www.camdencontrols.com

BSI Certified ISO 9001: 2015
FS 541752