CX-91 Series
600 lbs. & 1200 lbs. Single Door Magnetic Locks

SECURITY UL LISTED

CX-91S-06: UL1034 / UL294
CX-91M-06: UL864
Standard for Burglary-Resistant Electric Locking Mechanisms

c UL

CX-91S-06: ULC S533-15
CX-91M-06: ULC S527
Standard for Access and Egress



600 lbs.



1200 lbs.

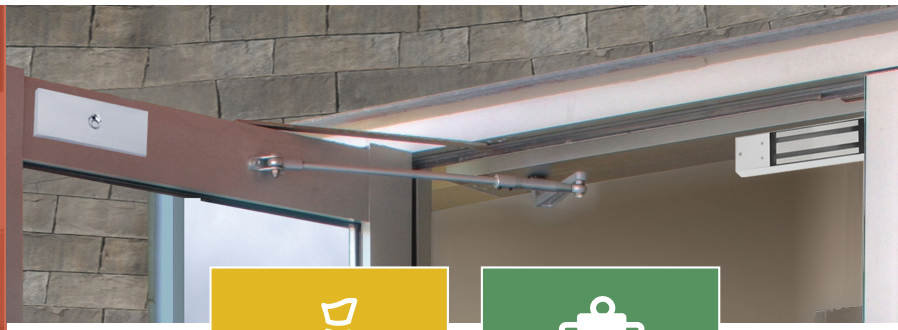

BEST VALUE

BEST QUALITY

CX-91 Series 600 lbs. & 1200 lbs. Single Door Surface and Mortise Mount Magnetic Locks offer the best peformance and value.

A built-in 'TLS' option provides an adjustable timer, lock sensor, relay and LED. TDS option includes door status switch as well.

Camden's Magnetic Locks are easily installed. A metal mounting template is packaged with the unit.

Vandal resistant construction is built to last - lifetime warranty!

Features

- Weather and vandal resistant construction proven over thousands of installations
- Surface and mortise mount models
- Compatible with all access / egress systems
- Field selectable 12/24 VDC operation
- On board MOV power surge protection prevents damage to the magnetic lock
- A range of mounting brackets and spacers available

LIFETIME WARRANTY

SPECIFICATIONS

VOLTAGE: 12/24 VDC

CURRENT DRAW:
CX-91S-06: 480mA / 12 VDC | 240mA / 24 VDC
TDS: 510mA / 12 VDC | 285mA / 24VDC
CX-91M-06: 500mA / 12 VDC | 250mA / 24VDC
TLS: 500mA / 12 VDC | 265mA / 24VDC

CONTACT RATING: TDS/TLS models only:
Bond Sensor: 2A @ 24 VDC | Door Status Switch: 0.5A @ 28V AC/DC

HOLDING FORCE: CX-91S-06 : 600 LBS. (272 KG.) | CX-91S-12TDS : 1200 LBS. (544 KG.)
CX-91M-06 : 600 LBS. (272 KG.)

TEMP. RANGE: 32°F - 131°F (0°C to 55°C)
TIME DELAY: TDS/TLS models only: 5 - 25 seconds

Body Dimensions:
CX-91S-06: 9-7/8"W x 1-5/8"H x 1-1/8"D (250mm x 42mm x 27mm)
CX-91M-06: 9"W x 1-1/2"H x 1-1/8"D (229mm x 38mm x 28mm)
CX-91S-12: 10-1/2"W x 2-5/8"H x 1-9/16"D (266mm x 67mm x 40mm)

Armature Plate Dimensions:
CX-91S-06: 7-1/4"W x 1-1/2"H x 15/32"D (185mm x 38mm x 12mm)
CX-91S-12: 7-9/32"W x 2-13/32"H x 5/8"D (185mm x 61mm x 16.5mm)

ORDERING INFORMATION

CX-91S-06
600 lbs. Surface Mount Single Door - Basic

CX-91S-06TDS
600 lbs. Surface Mount Single Door - with adjustable timer, door status switch, lock sensor, relay and LED

CX-91M-06
600 lbs. Mortise Mount Single Door - Basic

CX-91M-TLS
600 lbs. Mortise Mount Single Door - with adjustable timer, door status switch, lock sensor and relay

CX-91S-12
1200 lbs. Surface Mount Single Door - Basic

CX-91S-12TDS
1200 lbs. Surface Mount Single Door - with adjustable timer, door status switch, lock sensor, relay and LED

DIMENSIONS

CX-91S - 600 lbs.

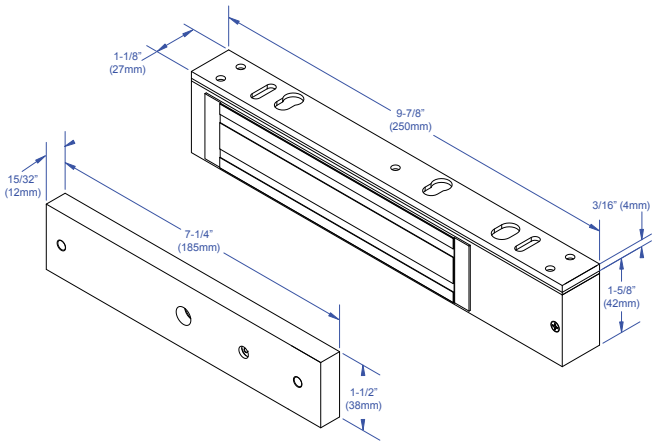

CX-91M - 600 lbs.

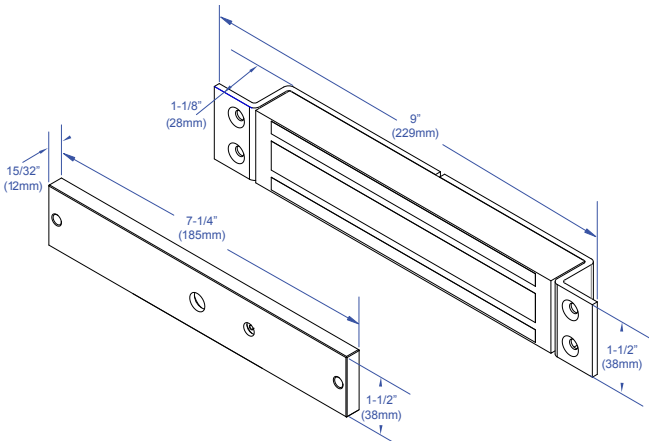

CX-91S - 1200 lbs.

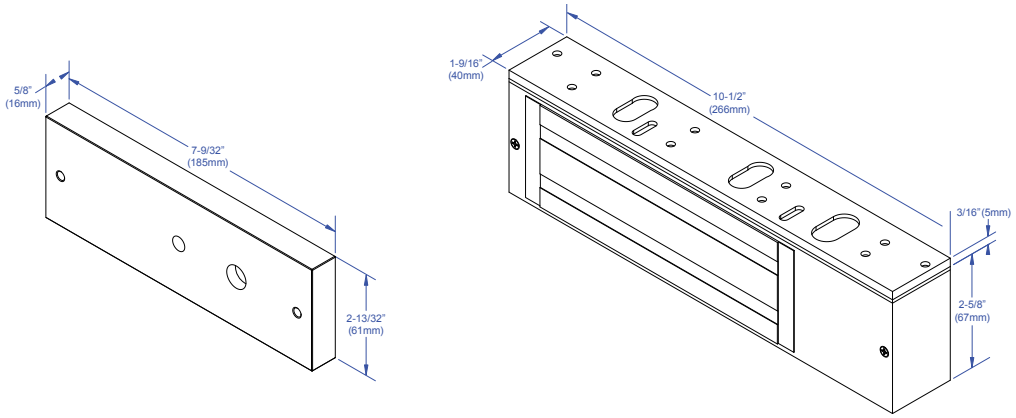

CAMDEN DOOR CONTROLS

Opening New Doors to Innovation, Quality and Support!

5502 Timberlea Blvd. Mississauga, ON Canada L4W 2T7 • Toll Free: 1 877 226-3369 (CAMDEN9)
Tel: (905) 366-3377 • Fax: (905) 366-3378 • E-mail: info@camdencontrols.com • www.camdencontrols.com

BSI Certified ISO 9001: 2015
FS 541752

Part #: MKTG-LIT-SP-CX-91Series