CX-90 Series
300 lbs. Single Door Magnetic Locks

UL LISTED





BEST VALUE

BEST QUALITY

CX-90S-03 & CX-90M-03 300lb. Single Door Surface and Mortise Mount Magnetic Locks offer the best performance and value.

CX-90 Series magnetic locks are compact and ideal for securing cabinets, gates and other security applications where a larger magnetic lock is not practical or desired.

Camden 300 lbs. magnetic locks feature heavy duty all-metal construction with easy installation.

Features

- Low profile design ideal for small enclosures
- Surface and mortise mount models
- Compatible with all access / egress systems
- Field selectable 12/24 VDC operation
- On board MOV power surge protection prevents damage to the magnetic lock

LIFETIME WARRANTY

SPECIFICATIONS

VOLTAGE:	12/24 VDC
CURRENT DRAW:	360mA / 12 VDC | 180mA / 24 VDC
HOLDING FORCE:	300 LBS. (136 KG.)
TEMP. RANGE:	32°F - 131°F (0°C to 55°C)

BODY DIMENSIONS: **CX-90S-03:** 6-9/16"W x 1-3/8"H x 13/16"D (166mm x 35mm x 21mm)

CX-90M-03: 8"W x 1-3/8"H x 13/16"D (203mm x 35mm x 21mm)

Armature Plate: 5-1/8"W x 1-1/4"H x 1/4"D (8mm x 32mm x 6mm)

ORDERING INFORMATION

CX-90S-03	300 lbs. Surface Mount Single Door
CX-90M-03	300 lbs. Mortise Mount Single Door

DIMENSIONS

CX-90S - 300 lbs.

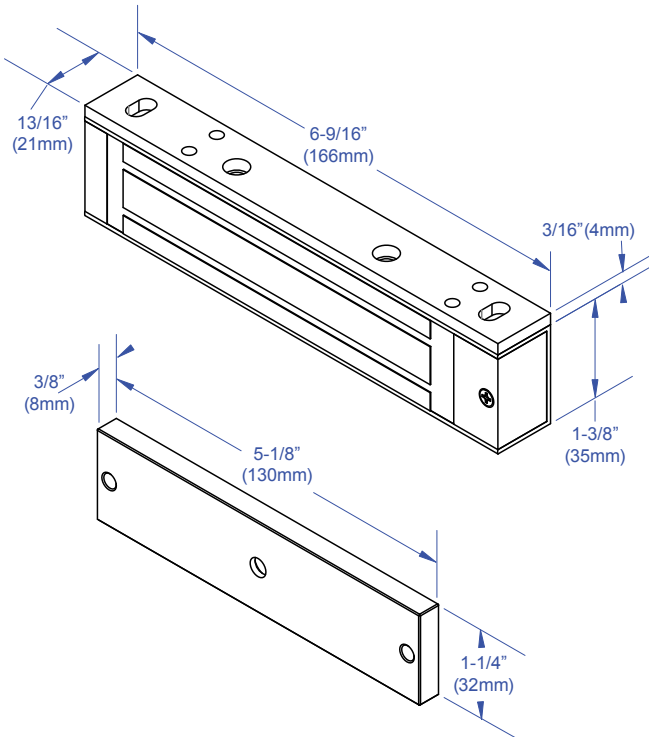

CX-90M - 300 lbs.

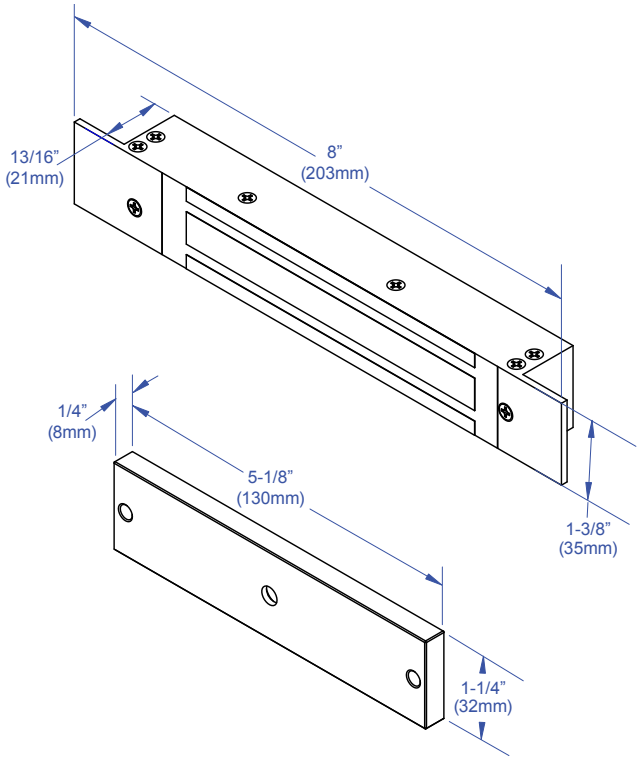

CAMDEN DOOR CONTROLS

Opening New Doors to
Innovation, Quality and Support!

5502 Timberlea Blvd. Mississauga, ON Canada L4W 2T7 • Toll Free: 1 877 226-3369 (CAMDEN9)
Tel: (905) 366-3377 • Fax: (905) 366-3378 • E-mail: info@camdencontrols.com • www.camdencontrols.com

BSI Certified ISO 9001: 2015
FS 541752