CX-33 ADVANCED LOGIC RELAY



CX-33

FEATURES

- 15 DIFFERENT OPERATING MODES, WITH SUB-MODES AND ADJUSTABLE TIMERS ON EACH RELAY, PROVIDE NEAR LIMITLESS APPLICATIONS.
- 5 INPUTS, INCLUDING A 'WET' INPUT, FOR MORE FLEXIBILITY. YOU CAN EASILY SEQUENCE FROM MULTIPLE POINTS, AND MAINTAIN & HOLD DIFFERENT OUTPUTS.
- NEW V3.2 FEATURES INCLUDE:
  - LOCK DOWN MODE DELAYED RELAY
  - ACTIVATION
  - SELECTABLE N.O OR N.C. INPUTS
- LARGE 3 SEGMENT DISPLAY IS EASIER TO VIEW AND UNDERSTAND.
- 3 BUTTONS FOR MODE SELECTION, OFFER FASTER & EASIER PROGRAMMING.
- 'TRIED AND TRUE' POWER CIRCUITRY ENSURES OUTSTANDING FILTERING AND SURGE PROTECTION, COMBINED WITH SIMPLE 2 TERMINAL DESIGN.
- 3 HEAVY DUTY 3 AMP. FORM C OUTPUTS
- LED'S FOR VISUAL RELAY CONFIRMATION

3 YEAR WARRANTY

DESCRIPTION

Camden Door Controls CX-33 Advanced Logic Relay is a 'state of the art' door controller designed for 'universal' operation in virtually any automatic door application.
This compact unit is small enough to fit inside most door operator cases. It provides a large 3 segment LED and simple push buttons for the easiest programming, and supports illuminated signage in restroom applications. CX-33 is pre-programmed for interconnection with access control, fire alarm and telephone entry systems. CX-33 also leads the market with a range of exclusive operating features, including time duration in airlock applications and protection of automatic door operators when utilizing magnetic locks.

APPLICATION

The flexibility of the CX-33 lends itself to an incredible variety of locking and and/or automatic door applications, such as sequencing applications using 2 or 3 doors. Also included are modes required for safety sensor installations. What is unique in the CX-33 is being able to combine these functions simultaneously with a switching network (make/break relay).

Another application for the CX-33 is single occupant restrooms equipped with low energy operators. Our 3 relay design now includes a dedicated output for illuminated signage.

Other uses include smoke evac (fire door), 2-door timed or latching airlocks, and certain access control situations where an extended trigger input results in the lock retracting while enabling an exterior wall switch.

For apartment entry applications, a direct connection to the phone entry panel simplifies wiring, and eliminates the need for an isolating relay. This input unlocks the door, and energizes a vestibule convenience switch (if one is provided).

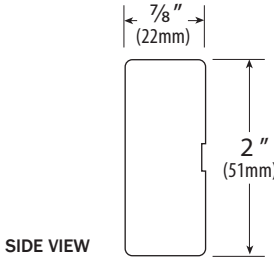

SIDE VIEW

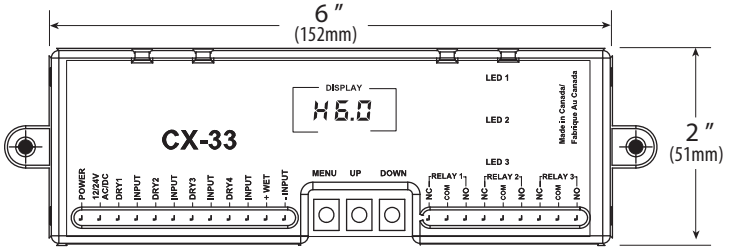

FRONT VIEW

TYPICAL APPLICATION

NORMALLY UNLOCKED* SINGLE USE RESTROOM

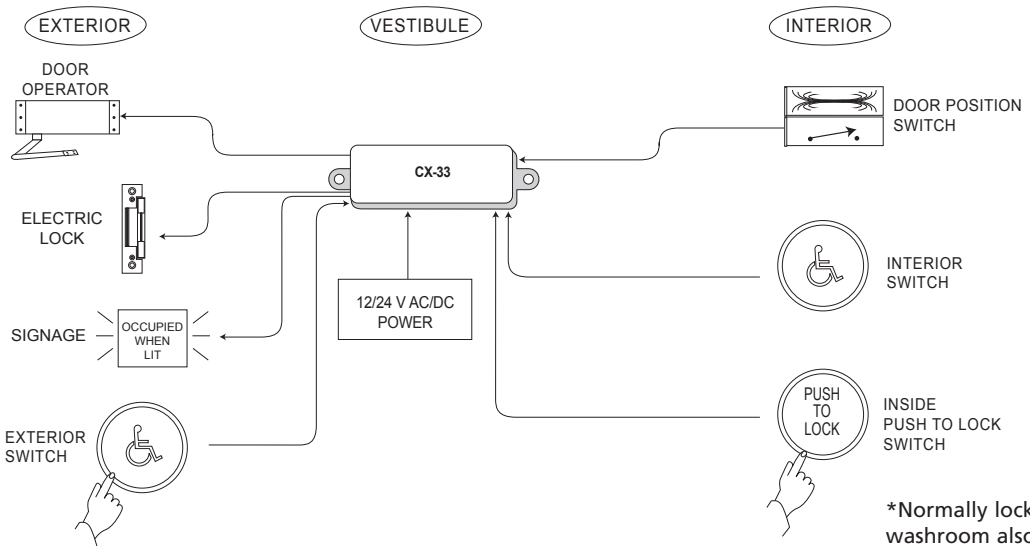

*Normally locked washroom also possible

BI-DIRECTIONAL DOOR SEQUENCER

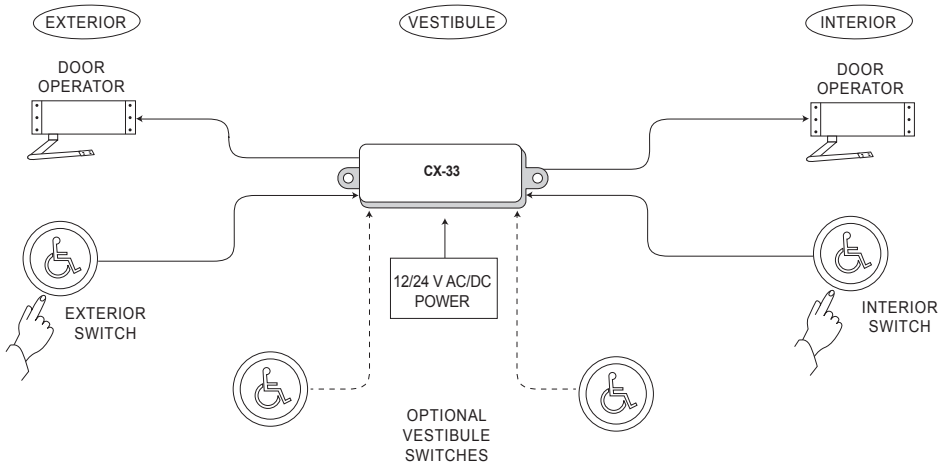

APARTMENT/CONDO APPLICATION

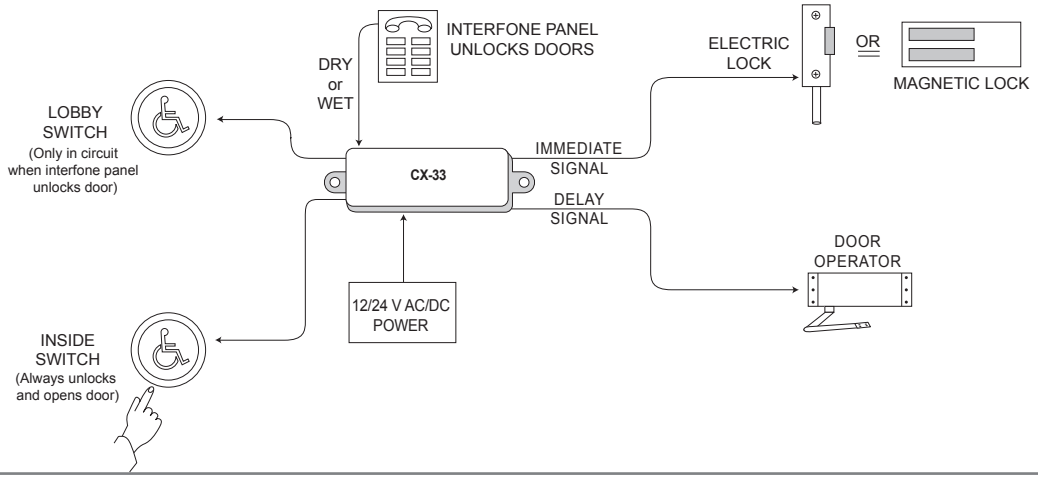

OPERATING MODES

Mixed-Mode Triggering: Any input sequences all 3 relays. One input (wet, or dry) is for momentary devices, another input maintains relay 1 if the input is held, another input maintains relay 3 if the input is held, and another input latches relay 3 until re-activated again. Suitable for smoke evacuation, stairwell doors, or latching applications.

2-Door Airlock: Utilizing door position switches, this mode ensures only one door will be open at a time. 3 outputs allow one door to have an electric lock and an auto door operator. Each output hold time is adjustable from 1 – 50 seconds.

Latching 2 Door Airlock: This mode utilizes door position switches to ensure only one door can be open at one time. One switch activation will latch open (unlock) the door, and the second activation will allow the door to close (lock). The CX-33 is unique in the industry because it also provides the ability to add in an adjustable "walk-away" time. If the door input has been activated but the door has not been opened the relay will reset (re-lock). Both doors have their own respective adjustable timers. (If the time is set to zero, the feature is disabled).

Bi-Directional Door Sequencer (with 4 inputs): Two of the inputs sequence in each direction, and the remaining two open their respective door only. The 3 outputs provided by the CX-33 allow one door to have an electric lock and an auto door operator.

Apartment / Condo Applications: The CX-33 provides both Wet or Dry (momentary) connection to Telephone Entry System. This allows a door lock to be released remotely, which then "enables" a vestibule "courtesy switch" for as long as the door is unlocked. When the door re-locks, the "courtesy switch" is removed from the circuit. An input for the inside switch always unlocks and opens the door. Finally, input #4 turns on relay #3 for an adjustable time.

Access Control Applications: Similar to above but designed for continuous wet or dry inputs, where the access system or time clock would send a maintained signal to unlock the door all day. While the lock is open, the outside switch is put into the circuit to allow the door to open automatically. At the end of the day when the door is re-locked, the outside switch is removed from the circuit. At any time, the inside switch will unlock and open the door.

Restroom Door (Normally Unlocked): For single occupant barrier free restrooms desiring a convenient method of locking/unlocking, opening, and control of the automatic door opener. The CX-33 also provides a relay dedicated to "Occupied" & "Door Locked" signage.

Restroom Door (Normally Locked): Similar to above mode except designed for a normally locked restroom door. Outside access can be from a keypad, prox card or other suitable credential. Our exclusive design allows for a dedicated output relay solely for signage.

Lock out Relay + Switching Network: This mode combines, for the first time, a lintel mount safety sensor lock-out relay with a switching network (aka; make/break relay). The voltage sensing circuit can be utilized with motors/controls up to 120 volts AC/DC. The adjustable hold timer is then matched to door closing time. In addition, three inputs and two relays are provided for the switching network function.

Low Energy Sensor Inhibitor: Utilizing a door position switch input, this mode enables or disables a door mounted presence sensor. The sensor is put into the circuit when a wall switch is pressed, and is taken out of the circuit when the door is fully closed. In addition, two inputs and two relays are provided for the switching network function.

Continued on back page...

Operating Modes Cont'd...

Magnetic Lock Applications: The CX-33 operates as a switching network specifically designed for doors with mag locks. A wall switch signals the relay, which unlocks, and opens the door for an adjustable time. Utilizing the door position switch, the relay will not re-apply power to the magnetic lock until the door is fully closed. The CX-33 also provides a normally open fire alarm input, which when activated, unlocks the door and disables the wall switch inputs. This mode is commonly used in hospital corridors.

Fire Alarm Input (Normally Closed): The CX-33 can also accept a normally closed fire alarm input, which when activated, unlocks the door and disables the wall switch inputs.

Special Purpose Sequencer: In this unique mode, Input #1 sequences relays #1 & #2 and input #2 sequences relays #1 & #3.

Delayed Relay Activation: In this unique mode, a Switch connected to Input 1 will cause Relay 1 to fire immediately, but not allow Relays 2 & 3 to fire until a pre-set elapsed time has expired. The user must push and hold the switch for this length of time.

Lock Down: All-active switches connected to the CX-33 trigger the door operator. When a remote "Lock Down" switch is activated, the CX-33 locks the door and disables the connected all-active switches. Pressing the "Reset" button, resets the system and unlocks the door. This is suitable for schools.

Any of the above modes can be programmed with a 1 – 10 second delay-on-activate feature on any input. When turned on, an input has to be held on for the pre-selected time period before the relay(s) will fire. This is useful for photo-beam activated overhead doors where a nuisance delay is desired, or other delayed activation applications.

SPECIFICATIONS

MOUNTING:	(2) #6 SCREWS OR VELCRO
OPERATING VOLTAGE:	12 TO 24 VOLTS AC/DC
OPERATING TEMPERATURE:	-22°F TO +185°F (-30°C TO + 85°C)
CURRENT DRAW:	105 MA TYPICAL 320MA MAXIMUM
RESPONSE TIME:	.5 SECONDS
DISPLAY:	BLUE MULTI-SEGMENT LED
PROGRAMMING:	1 MENU, PLUS UP & DOWN BUTTONS
INPUTS:	4 X DRY **1 X WET:** MIN 4.5V/AC/DC
RELAY OUTPUTS:	(3) FORM 'C' (SPDT)
CONTACT RATING:	3 AMPS @ 24VDC
TIME DELAYS:	**HOLD 1 TIMER:** 0 - 50 SECONDS
	DELAY 1 TIMER: 0 - 15 SECONDS
	HOLD 2 TIMER: 0 - 50 SECONDS
	DELAY 2 TIMER: 0 - 60 SECONDS
	HOLD 3 TIMER: 0 - 50 SECONDS
	DELAY ON ACTIVATE: 0 - 10 SECONDS
DIMENSIONS:	6"W x 2"H x 7/8"D (152mm x 51mm x 22mm)