CX-33PS
Door Control & Power Supply





EASIER INSTALLATION

ADVANCED TECHNOLOGY

CX-33 Advanced Logic Relay is now available in pre-wired power supply cabinet!

Camden CX-33PS control and power supply cabinet is designed to provide the easiest installation, with pre-wired system components, large color coded wiring terminals, and a compact metal cabinet, with option for a lock. The UL listed 2 Amp power supply is able to supply power to controls and annunciators, as well as, electrified locking devices. A class II transformer is also provided.

CX-33PS control and power supply cabinets provide a code compliant solution for any door control application and are pre-configured when purchased as part of Camden restroom control and emergency call system kits.

Features

- Complies with ANSI A158.19 for Power Operated Pedestrian doors.
- 12V or 24V DC selectable power supply module.
- Short circuit and thermal overload protection.
- Visual LED indicator for easy diagnosing
- 15 Operating modes selected using 3 simple pushbuttons.
- Enhanced security features include; Lock down mode and delayed relay activation.
- Three large, blue 8-segment LED displays for easy programming and configuration.
- Five convenient conduit knockouts; one per side.
- Pre-punched cam lock provision
  (Cam lock set ordered separately.)
- 3 year warranty

TERMINALS

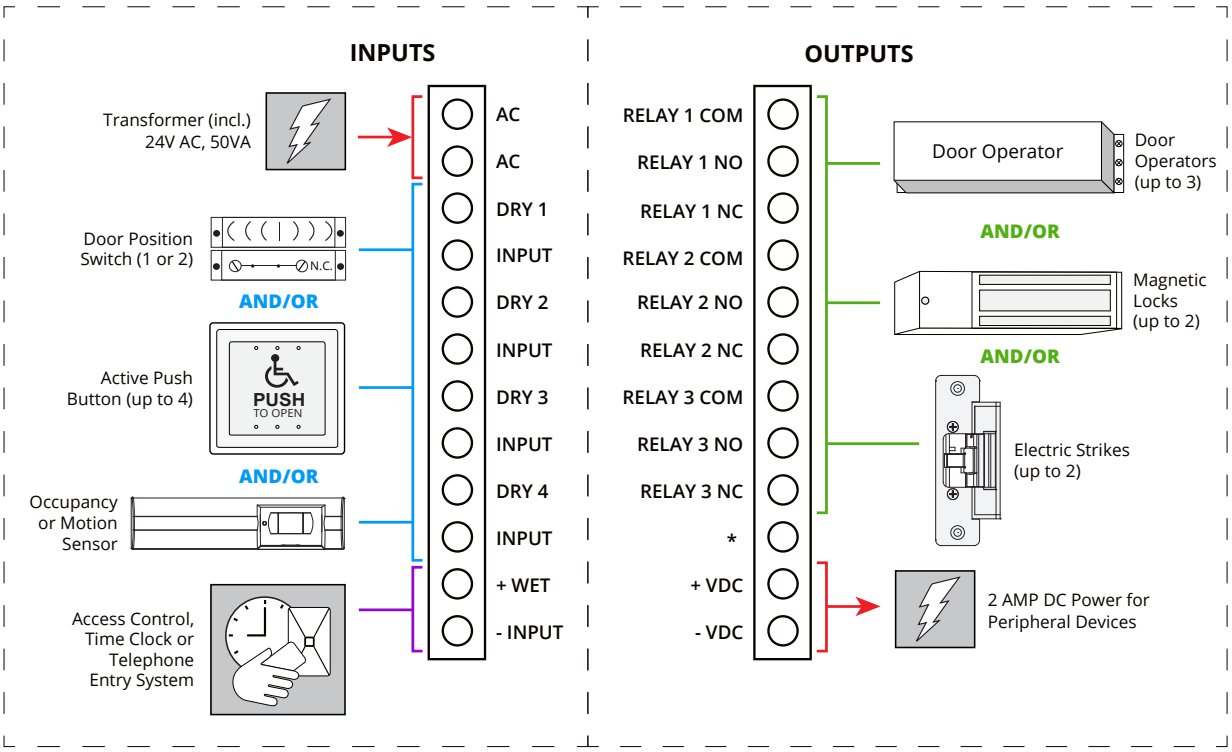

Refer to CX-33 Advanced Logic Relay specification sheet for more Controller information.
Refer to CX-WC Series specification sheet for more Barrier Free Restroom Control System information.

SPECIFICATIONS

AC INPUT:	12V to 28V
DC OUTPUT:	12V or 24V DC
CURRENT:	2 Amps
BATTERY BACKUP:	Gel Type Battery
LED INDICATOR:	AC and DC Output
TEMPERATURE:	40°F to 158°F (-40°C to 70°C)

INPUTS:	(4) Dry (1) Wet 5V to 120V AC/DC, Non Polarity Optically Isolated
OUTPUTS:	(3) Form 'C' (SPDT), 3 Amps @ 24V DC
TIME DELAY:	Hold 1 Timer: 0 to 50 seconds Delay 1 Timer: 0 to 15 seconds Hold 2 Timer: 0 to 50 seconds Delay 2 Timer: 0 to 60 seconds Hold 3 Timer: 0 to 50 seconds Delay on Activate: 0 to 10 seconds
DIMENSIONS:	7 7/8" W x 11 1/16" H x 2 13/16" D (200mm x 281mm x 72mm)

DIMENSIONS

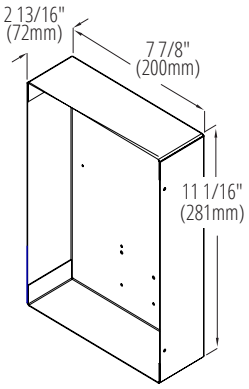

ORDERING INFORMATION

Door Control Power Supply



CX-33PS
Advanced Logic Relay, 2 Amp, Power Supply Cabinet and Transformer
A complete kit for any timed door application which includes a metal cabinet, power supply, a CX-33 control relay, and a 120/24V AC Class II transformer.

'L'	Add suffix '**L**' to model number for Cabinet Lock

CAMDEN DOOR CONTROLS

Opening New Doors to Innovation, Quality and Support!

5502 Timberlea Blvd. Mississauga, ON Canada L4W 2T7 • Toll Free: 1 877 226-3369 (CAMDEN9)
Tel: (905) 366-3377 • Fax: (905) 366-3378 • E-mail: info@camdencontrols.com • www.camdencontrols.com

BSI Certified ISO 9001: 2015 FS 541752

Part #: MKTG-LIT-SP-CX-33PS