CX-247

7 DAY PROGRAMMABLE TIMER



CX-247

FEATURES

- MICROPROCESSOR CONTROL
- 15 DAILY OR WEEKLY SCHEDULES
- 16 'ON' AND 'OFF' EVENTS
- EXTREMELY COMPACT SIZE
- MEMORY BACKUP
- EASY MOUNTING
- 'H' MODELS FEATURE 'FIRST-MAN-IN' FUNCTION (HOLIDAY/SNOW DAY)
- 16A@ 30 V DC CONTACTS
- 3 YEAR WARRANTY

DESCRIPTION

Camden Door Controls is an ultra compact programmable 7 day timer. It features a large digital display, and 16 flexible easy-to-program on/off schedules. An internal permacell keeps the programs and display readable in the event of a power loss or brownout.

The CX-247 can be ordered to operate on 12V, or 24V, AC/DC. The heavy duty relay contacts are rated at 16 amps @ 30 VDC.

The "First-Man-In" option maintains security during "snow-days", sick days, employee absenteeism. The timer schedule does not engage, (and the door remains locked) until the "First-Man-In" activates the entry system.

APPLICATION

The CX-247 can automatically and reliably control electrified locks and magnets, automatic overhead and pedestrian doors, or control lighting or energy management devices.

The "First-Man-In" option eliminates the need for a complex 365-day timer.

The compact size and dust and water resistant enclosure, ensure it will meet virtually any timing application.

5502 Timberlea Blvd. Mississauga, ON Canada L4W 2T7 • Toll Free: 1 877 226-3369 (CAMDEN9)
Tel: (905) 366-3377 • Fax: (905) 366-3378 • E-mail: info@camdencontrols.com • www.camdencontrols.com

TYPICAL APPLICATION

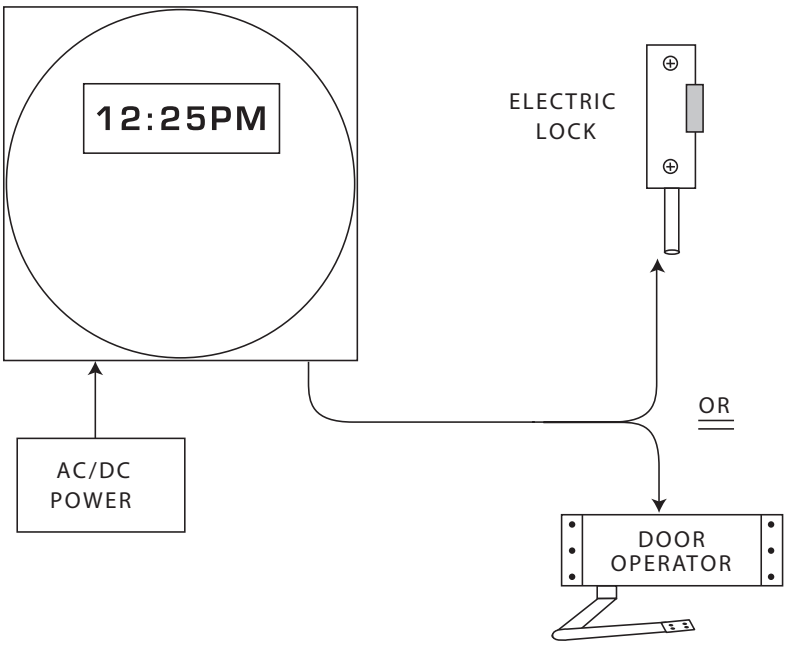

SPECIFICATIONS

	CX-247-12	CX-247-24
OPERATING VOLTAGE:	12V AC/DC	24 V AC/DC
DIMENSIONS:	2 3/8" H x 2 3/8" W x 1 1/4" D (60mm x 60mm x 32mm)	
MOUNTING:	4 MOUNTING SCREWS	
ENCLOSURE:	WHITE ABS PLASTIC	
CURRENT DRAW:	0.1 MA IDLE, 10 MA OPERATING	
RESPONSE TIME:	.03 SECONDS	
BACK UP:	INTERNAL PERMACELL	
PROGRAMS:	16	
RELAY OUTPUTS:	1 X FORM 'C' (SPDT)	
CONTACT RATING:	16 AMPS @ 30 VAC	
ELECTRICAL LIFE:	250,000 @ RATED CAPACITY	

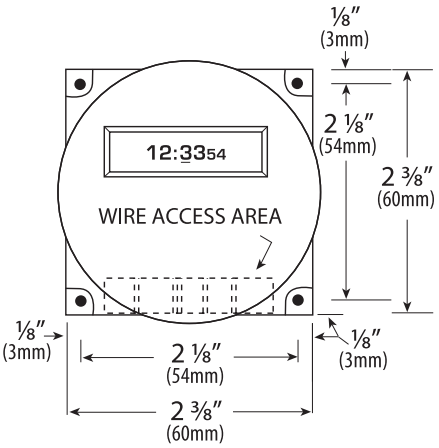

CX-247

ORDERING INFORMATION

MODEL	DESCRIPTION
CX-247-12:	7 DAY TIMER - 12V
CX-247-24:	7 DAY TIMER - 24V
CX-247H-12:	7 DAY TIMER WITH FIRST-MAN-IN-FUNCTION - 12V
CX-247H-24:	7 DAY TIMER WITH FIRST-MAN-IN-FUNCTION - 24V

CAMDEN DOOR CONTROLS
5502 Timberlea Blvd. Mississauga, ON Canada L4W 2T7 • Toll Free: 1 877 226-3369 (CAMDEN9)
Tel: (905) 366-3377 • Fax: (905) 366-3378 • E-mail: info@camdencontrols.com • www.camdencontrols.com
MKTG-LIT-SP-247-R5
Certified ISO 9001: 2008
FS 541752