# CX-12 PLUS
# Door Interface Relay

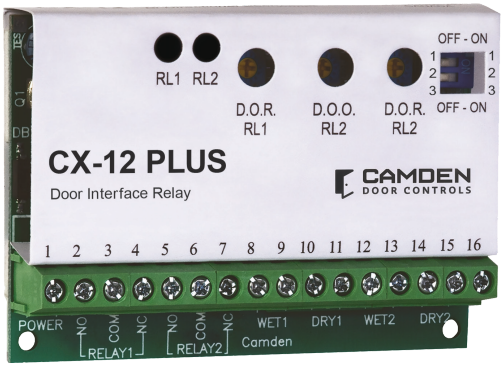




**BEST VALUE**

**EASIER INSTALLATION**

**CX-12 PLUS Door Interface Relay is an economical solution for interconnecting automatic doors with access control, fire alarm and time systems.**

This versatile relay is also designed to control two automatic doors in vestibule applications as well as control of automatic doors in basic restroom control applications.

CX-12 PLUS has eight built-in operating modes with delay-on-release and delay-on-operate time adjustment, and (2) heavy duty Form C relays.

## Features

- Designed for easy interconnection of automatic doors with access control, time control, telephone entry and fire alarm systems
- Bi-directional sequencing of two door operators in vestibule applications
- New 'PLUS' feature supports basic restroom control (locked & unlocked)
- 8 Programming modes with (3) adjustable time delays, each up to 30 seconds
- (2) Dry, (2) Wet inputs, and (2) SPDT Form 'C' outputs
- Momentary, maintained and latching (ratchet or alternative action) relay operation
- Compact design fits anywhere

## APPLICATIONS

The CX-12 PLUS Interface Relay is ideal for control and integration of automatic doors utilizing electro-mechanical locks (including electric strikes and magnetic locks) in any commercial, institutional and multi-unit residential application. Operating modes support bi-directional sequencing of two vestibule doors, basic restroom control, both secured and unsecured, a maintained output for fire alarm integration, and a telephone entry panel input that simplifies wiring, and eliminates the need for an isolating relay.

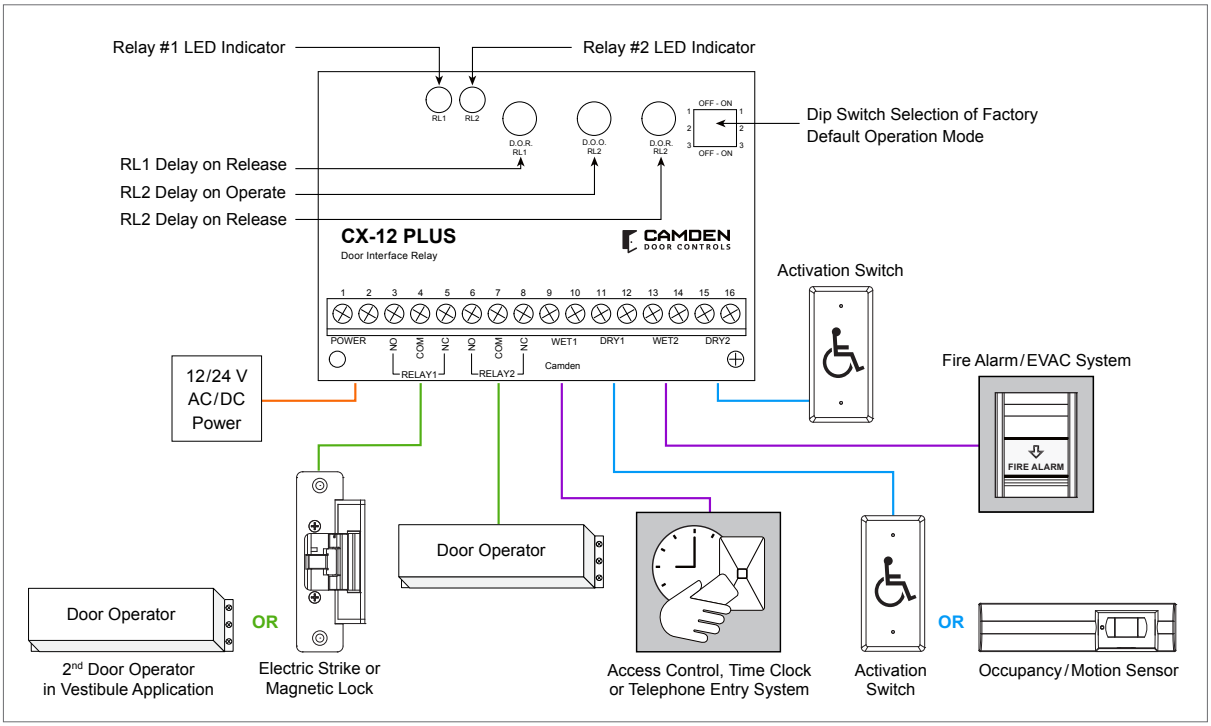


## SPECIFICATIONS

| | | | |
|---|---|---|---|
| VOLTAGE: | 12/24V AC/DC | ELECTRICAL LIFE TIME: | 100,000 @ Rated Capacity |
| CURRENT DRAW: | 20 mA Idle | MODES: | 8 |
| | 60 mA Operating | TIME DELAY | D.O.R. #1: 1-30 Seconds |
| RESPONSE TIME: | 0.3 Seconds | | D.O.O. #2: 1-30 Seconds |
| INPUTS: | 2 Wet, & 2 Dry, N.O. | | D.O.R. #3: 1-30 Seconds |
| OUTPUTS: | 2 x Form C (SPDT) | DIMENSIONS: | 3-1/4"W x 2-5/16"H x 11/16"D |
| CONTACT RATING: | 3 Amps @ 30V DC | | (83mm x 58mm x 18mm) |

## DIMENSIONS

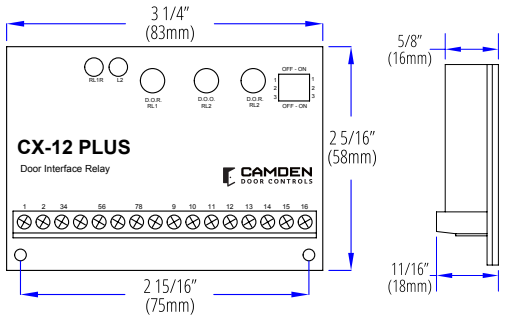


## ORDERING INFORMATION

### Door Interface Relay



**CX-12PLUS**
Door Interface Relay
(8) Programming modes with (3) adjustable time delays, each up to 30 seconds
(2) Dry, (2) Wet inputs, and (2) SPDT Form 'C' outputs

CAMDEN DOOR CONTROLS **Opening New Doors to Innovation, Quality and Support!**


5502 Timberlea Blvd. Mississauga, ON Canada L4W 2T7 • Toll Free: 1 877 226-3369 (CAMDEN9)
Tel: (905) 366-3377 • Fax: (905) 366-3378 • E-mail: info@camdencontrols.com • www.camdencontrols.com



BSI Certified ISO 9001: 2015 FS 541752

Part #: MKTG-LIT-SP-CX-12PLUS