CX-1000/74

MICROMINDER

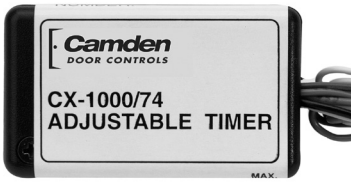

CX-1000/74

FEATURES

- ULTRA COMPACT DESIGN
- ADJUSTABLE DELAY FROM 1-30 SECONDS
- 12-24 VOLTS AC OR DC
- COLOR CODED LEADS
- MOUNTED IN CONVENIENT PLASTIC CASE
- SPDT CONTACTS RATED AT 3 AMPS @ 24V DC

DESCRIPTION

Camden Door Controls CX-1000/74 MicroMinder is a flexible easy-to-operate, delay on release timer which operates on 12-24 Volts AC/DC. The delay is adjustable from 1 to 30 seconds, and is accessed through a hole in the cover. The Form C relay output is rated at 3 amps @ 24V DC. The input may be a dry contact such as a wall switch.

The compact enclosure protects the relay should it be placed inside a metal box, operator housing, or in the ceiling or wall cavity. The circuit board may be removed from the enclosure if space is at a premium.

APPLICATION

The MicroMinder is ideal for automatic door operators which do not have built in time delays.

It is also suitable for (de) energizing an electric strike or electromagnet for an adjustable time period, or any other application requiring a quality dependable timer.

5502 Timberlea Blvd. Mississauga, ON Canada L4W 2T7 • Toll Free: 1 877 226-3369 (CAMDEN9)
Tel: (905) 366-3377 • Fax: (905) 366-3378 • E-mail: info@camdencontrols.com • www.camdencontrols.com

TYPICAL APPLICATION

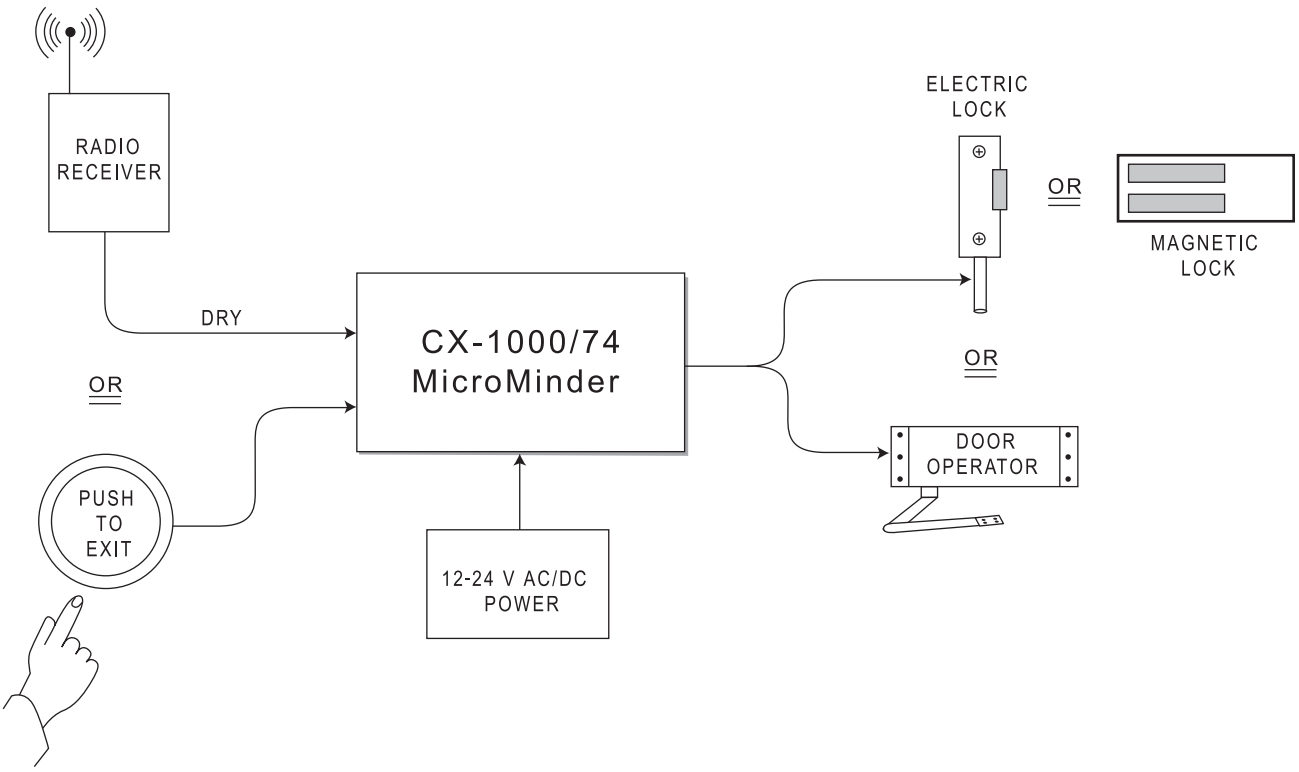

SPECIFICATIONS

DIMENSION:	2 1/4"H x 1 1/4" W x 3/4" D (57mm x 32mm x 19mm)
MOUNTING:	DOUBLE SIDED FOAM TAPE
ENCLOSURE:	BLACK STYRENE PLASTIC
OPERATING VOLTAGE:	12-24 VOLTS AC/DC
CURRENT DRAW:	20 MA IDLE, 33 MA OPERATING
RESPONSE TIME:	.03 SECONDS
INPUT:	N.O. DRY CONTACT
RELAY OUTPUT:	FORM 'C' (SPDT)
CONTACT RATING:	3 AMPS @ 24V DC
ELECTRICAL LIFE:	100,000 @ RATED CAPACITY
TIME DELAY:	1 - 30 SECONDS

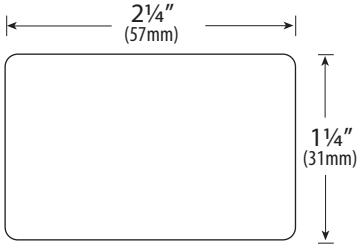

FRONT VIEW

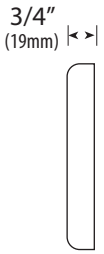

SIDE VIEW

Camden DOOR CONTROLS
5502 Timberlea Blvd. Mississauga, ON Canada L4W 2T7 • Toll Free: 1 877 226-3369 (CAMDEN9)
Tel: (905) 366-3377 • Fax: (905) 366-3378 • E-mail: info@camdencontrols.com • www.camdencontrols.com

BSI FS 541752
Certified ISO 9001: 2008