CM-AF500 Series
LED Annunciators



Camden's CM-AF500 Series illuminated annunciators are designed to provide critical messages to building occupants.

When not illuminated, the sign (text and/or graphics) is invisible. When illuminated, the text/graphics are highly visible - even in bright daylight. CM-AF500 series signs and push buttons are weatherproof and vandal resistant.

Field selectable 12/30V AC/DC operation allows the sign to be used in a variety of low voltage applications, including automatic door, access control and other low voltage systems.



BEST VALUE

BEST QUALITY

Features

- **CM-AF500:**
  (6) message insert labels included,
  English, French and Bilingual
- **CM-AF503:**
  Horizontal, curved, with (6) message labels
- **CM-AF501SO:**
  'Assistance Required' label, with sounder
  Adjustable 85dB sounder
- **Bright LEDs for high visibility, even in daylight**
- **Text / graphics are not legible when not illuminated**
- **Vandal and weather resistant construction**
- **3 year warranty**

SPECIFICATIONS

VOLTAGE: 12/30V AC/DC

CURRENT DRAW: **CM-AF500 / AF550R:** 30 - 50mA
CM-AF501SO / AF540SO: 30 - 75mA

TEMP RANGE: 32°F - 176°F (0°C - 80°C)

CONSTRUCTION: 18 gauge stainless steel faceplate

SOUNDER: **CM-501SO / CM-AF540SO:** Adjustable, 85dB @ 10cm max.

STD FINISH: US 32/C32D

PUSH BUTTON: **CM-AF540SO:** Maintained (Push/Pull), N/O & N/C, 6A @ 30 VDC
CM-AF550R: Momentary (Spring Action) N/O, 6A @ 30 VDC

DIMENSIONS: **CM-AF500 / CM-AF501SO:** 4-1/2"H x 2-3/4"W x 9/16"D (114mm x 70mm x 15mm)
CM-AF503: 3"H x 5-9/10"W x 1/20"D (76mm x 127mm x 1mm)
CM-AF540SO / CM-AF550R: 4-1/2"H x 4-1/2"W x 9/16"D (114mm x 114mm x 15mm)

MODELS

 **CM-AF500**	Single Gang LED Illuminated Annunciator. Labels included: 'Occupied When Lit', 'Occupied/Occupé' (Red & Green), 'Armed' (Red), 'Locked' (Red) and 'Unlocked' (Green).
 **CM-AF503**	Single gang, horizontal, LED illuminated annunciator, curved profile designed for use with Column™ switches. With (6) English, French, and Bilingual message labels.
 **CM-AF501SO**	Single gang LED annunciator with adjustable sounder, 'Assistance Requested'. Add suffix 'F' for French, suffix 'FE' for bilingual.
 **CM-AF540SO**	Double gang, push/pull mushroom push button, red, 'Assistance Required', annunciator and adjustable sounder, 'Assistance Requested'. Add suffix 'F' to model number for French language.
 **CM-AF550R**	Double gang, mushroom push button, red, 'Push to Lock', with LED annunciator. Add suffix 'F' to model number for French language.

GRAPHIC OPTIONS

CM-AF500 and CM-AF503 Inserts

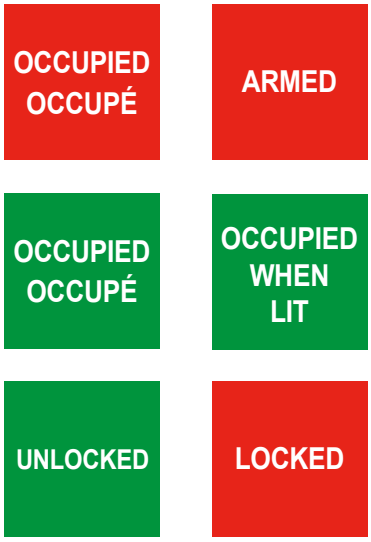

DIMENSIONS

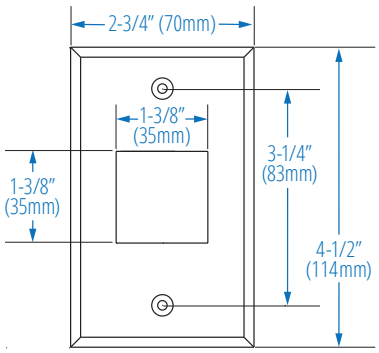

CM-AF500 / CM-AF501SO

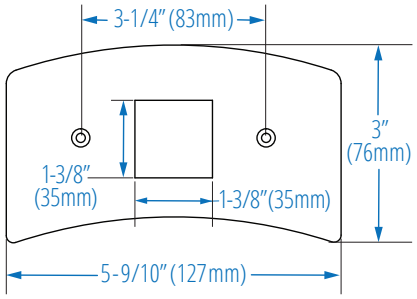

CM-AF503

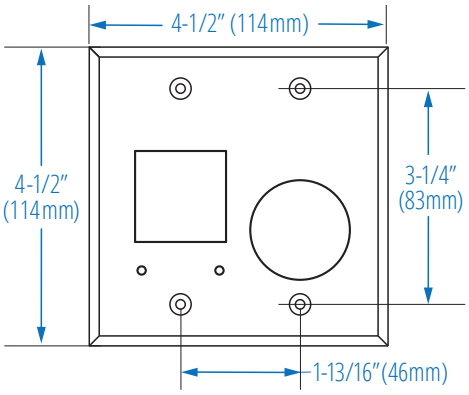

CM-AF540SO / CM-AF550R

CAMDEN DOOR CONTROLS

Opening New Doors to
Innovation, Quality and Support!

5502 Timberlea Blvd. Mississauga, ON Canada L4W 2T7 • Toll Free: 1 877 226-3369 (CAMDEN9)
Tel: (905) 366-3377 • Fax: (905) 366-3378 • E-mail: info@camdencontrols.com • www.camdencontrols.com

BSI Certified ISO 9001: 2015
FS 541752

Part #: MKTG-LIT-SP-AF500 R8