Securitron Magnalock Corp.
550 Vista Boulevard
Sparks, NV 89434

Tel 775.355.5625
Fax 775.355.5633
info@securitron.com
www.securitron.com

ASSA ABLOY, the global leader in door opening solutions

CELLULAR CONTROL MODULE CCM-1 AND CCM-1N INSTALLATION AND OPERATING INSTRUCTIONS

1. INTRODUCTION

The Cellular Control Modules CCM-1 and CCM-1N combine Securitron's renowned power supply and access control technology with an intelligent cellular and internet (web) based management system. These units provide remote controlled access of electrically actuated lock systems using a telephone or via the internet. The CCM-1 electronics package is recommended for indoor use and is contained inside a standard Securitron (NEMA-1) power supply cabinet. The CCM-1N is for outdoor applications and is contained in a NEMA-3R cabinet. Each unit operates at 12 VDC and provides a variety of easily selectable operating functions. This manual is intended to provide the installation, electrical requirements, functional options and selectable settings required to successfully install a CCM-1 or CCM-1N unit.

Note: CelAccess™ use requires AT&T™ Cellular Service. To verify coverage in the required area go to www.wireless.att.com/coverageviewer.

2. SPECIFICATIONS

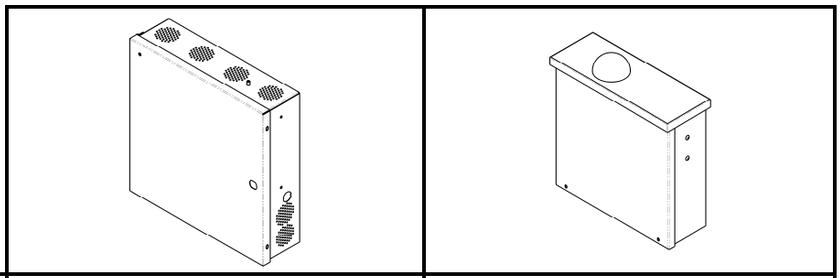

MODEL	CCM-1	CCM-1N
Use/Environment	Indoor (NEMA-1)	Outdoor (NEMA-3R)
Weight (without batteries)	13 Lbs [5.9 kg]	14 Lbs [6.4 kg]
Dimensions: Length	14.3" [363mm]	12.8" [325mm]
Height	14.3" [363mm]	13.6" [345mm]
Depth	4.1" [104mm]	4.7" [119mm]
Voltage	12 Volts DC	12 Volts DC
Current – At Rest	Up to 30mA	Up to 30mA
*Current – Operating	Up to 95mA	Up to 95mA
Operating Temperature Range (without batteries)	-22° to +140° F [-30° to +60° C]	-22° to +140° F [-30° to +60° C]
Operating Temperature Range (with batteries)	-4° to +113° F [-20° to +45° C]	-4° to +113° F [-20° to +45° C]

*Current draw shown here does not include the locking device.

3. RECOMMENDED TOOLS

- Hammer
- Center Punch
- Power Drill
- Drill bits
- Wrenches
- Pliers, vise grip
- Screwdrivers: Phillips & 1/8" Flat Blade
- Fish Tape or Lead Wire
- Wire Strippers/Cutter
- Multimeter

4. INSTALLATION INSTRUCTIONS

It is recommended that a site survey be performed to determine the mounting location prior to installation. The following should be considered:

- The area must have cellular coverage with a sufficient signal.
- Physical strength of mounting areas should provide adequate support of the installed unit.
- Adequate space should be provided for ventilation. Ensure that there is at least 2" of unobstructed space provided around the four sides of the enclosure.
- Ensure wiring can be routed to protect from damage due to intrusion or vandalism. (The enclosure is provided with knock-outs for conduit connections).

© Copyright, 2009, all rights reserved

P/N 500-23200
Rev. C, 8/09

4.1 Physical Installation

The CCM-1 is intended for indoor use and may be mounted directly to a wall. Use appropriate wall anchor hardware to secure the unit into place. A cam lock and screws have been provided to secure the hinged cover of the cabinet.

The CCM-1N is rated for outdoor use and can be wall mounted or affixed to a pole or post up to 1-1/2" diameter using the included hardware. Use short U-bolt in lower mounting holes to allow room for battery. A bracket kit accessory package for larger diameters is also available (see Section 6). A drop-in hasp for a padlock (not included) has been furnished to secure the CCM-1N cover.

The CCM-1N is furnished with its own integrated antenna (dome) affixed to the top of the unit. The CCM-1 is provided with a magnetically attachable antenna with an 8' cable. A hole is required through the cabinet that will allow the antenna cable to be routed from the modem connection to the desired location of the antenna. A simple access hole can be created by partially bending one of the cabinet electrical access knock-outs to create a feed through. The antenna base is magnetic and may be attached to any flat ferrous surface.

4.2 Electrical Installation

4.2.1 General Characteristics

Securitron's Model CCM-1 is combined with a 12 volt DC, 1 Amp power supply delivered in a single enclosure with the line voltage connection to be made by screw terminals. The unit features a regulated output with an independent sealed lead acid/gel cell battery charging capability. The voltage levels of the dedicated battery charging circuit are inherently current limited to a maximum of 100mA.

THE OUTPUT VOLTAGE MUST NOT BE ADJUSTED!

This unit meets Class 2 electrical requirements, which means that under the National Electrical Code, output wiring need not be in conduit. However, always check local building requirements to make sure of compliance with applicable wiring codes before installing these units.

4.2.2 Electrical Safety

Two conditions are present on the CCM-1 and CCM-1N power supply which present possible safety concerns. Line voltage input presents a potential high voltage shock hazard and the battery output presents a high energy hazard. If shorted, the battery output can generate sufficient heat to ignite some materials. To insure safety, note first that the cover LED is on (no LED on N version) whenever the supply offers danger, which is either if it is receiving line voltage or if the batteries are operating.

THE SUPPLY CABINET MUST ONLY BE OPENED BY TRAINED SERVICE PERSONNEL. THE AC POWER GREEN LED LOCATED ON THE POWER CONTROL BOARD IS LIT WHEN AC VOLTAGE IS PRESENT ON THE RED, ORANGE AND YELLOW TRANSFORMER WIRES. THE DC POWER RED LED IS LIT WHEN THE SUPPLY IS RECEIVING LINE VOLTAGE OR IF THE BATTERIES ARE OPERATING.

WARNING: IF A BATTERY PACK IS INSTALLED, THE VOLTAGE MUST BE 12 VOLTS.

4.2.3 Operating Characteristics

4.2.3.1 Line Voltage Input

120 VAC should be input to terminals “H”, “N”, “G”, as shown in Figure 1. The line voltage current drawn by the power supply module will be approximately 500 mA.

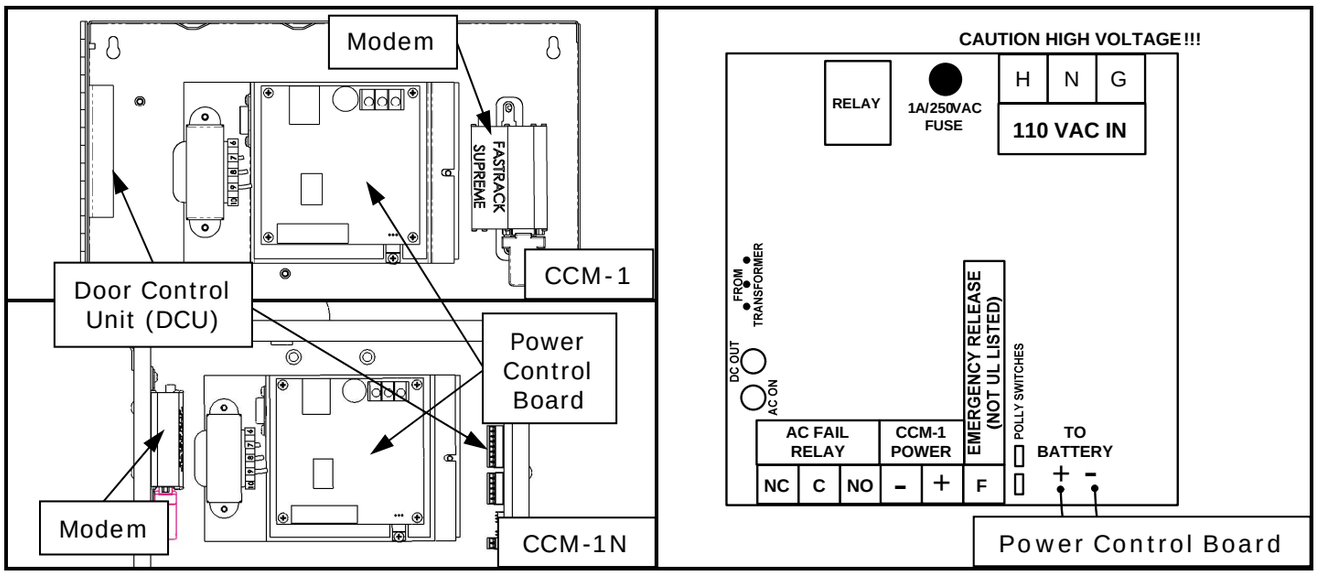

Figure 1

4.2.3.2 DC Output

The supply is capable of outputting 1 Amp when operating at 12 Volts.

4.2.3.3 LED Indicators

The AC power green LED located on the power control board is lit when AC voltage is present on the red, orange and yellow transformer wires. The DC power red LED is lit when the device is supplying DC voltage or if the batteries are supplying the operating power.

The status of LEDs can be used to diagnose certain fault conditions and are listed in Table A:

Red LED (DC) (on board)	Green LED (AC) (on board)	Description
ON	ON	Normal operation
ON	OFF	No AC detected – battery back-up is powering output
OFF	ON	No DC output – polyswitch may be tripped
OFF	OFF	No AC - no battery or polyswitch may be tripped
FOR CCM-1 ONLY: The front cover red (DC) LED is lit when DC voltage is sensed before the polyswitches. The red LED (DC) on the power control board is lit when DC voltage is sensed after the output polyswitch at the DC+ output. If the front cover red (DC) LED is lit and the red (DC) LED on the power control board is not lit, the output polyswitch may be tripped.		

Table A - LED Diagnostics

4.2.3.4 Battery Charging

The power supply incorporates a battery charging circuit appropriate for standby rated sealed lead acid or gel cell batteries. Batteries are an option. The power supply can be used with or without them. The battery pack is merely connected to the red and black battery leads following correct polarity. The batteries will be kept charged at all times by the power supply acting in concert with the components on the board. In the event of a line voltage power failure, the batteries will automatically drive the load. If the emergency release terminals are opened, battery power will, however, be cut off just as normal power from the power supply would be.

The components utilized on the unit for battery charging operate for battery packs up to 20 Amp hours in capacity. Note that certain long backup times are not achievable with the maximum size of the battery packs (“N/A” appears in the chart). Consult the battery pack chart Table B to calculate the correct battery pack based on desired backup time and the current drawn by the load.

Chart to determine the size of the battery pack

CURRENT DRAW	1HR	2HR	4HR	UL STD	8HR	16HR	24HR	48HR	72HR
150mA	5AH	5AH	5AH	5AH	5AH	5AH	8AH	8AH	12AH
300mA	5AH	5AH	5AH	5AH	5AH	8AH	12AH	16AH	N/A
500mA	5AH	5AH	5AH	5AH	8AH	12AH	16AH	N/A	N/A
750mA	5AH	5AH	8AH	12AH	12AH	16AH	20AH	N/A	N/A
900mA	5AH	5AH	8AH	12AH	12AH	N/A	N/A	N/A	N/A

Table B – Battery Pack Selection

(THIS CHART IS VALID IF BATTERIES ARE OPERATED AT ROOM TEMPERATURE).

BATTERIES MUST BE REPLACED AT LEAST EVERY 5 YEARS AS THAT IS THEIR MAXIMUM OPERATING LIFE.

BATTERIES MUST BE SEALED LEAD ACID TYPE - DO NOT USE DRY CELL OR NICAD BATTERIES.

4.2.3.5 Circuit Polyswitches and Fusing

A 1 Amp AC fuse is provided on the power control board together with 2 each 2.5 Amp DC polyswitches. The AC fuse is on the hot 120 VAC input and protects against a transformer internal short. A short in the DC load will not blow the AC fuse as the power supply is short-circuit protected. If more than the rated output is attempted to be drawn, it will shut off. A DC short, therefore, cannot damage the power supply but still will cause problems as the load will be shut off.

To protect against a short-circuit when batteries are being employed, a 2.5 Amp DC polyswitch breaker is provided. The polyswitch functions as an automatic circuit breaker. If it receives an overload, it rapidly cuts the current down to a small leakage current (about 100 mA). Once this happens the polyswitch must be reset by removing all current from the polyswitch for a period of 10 seconds. This is performed by simply disconnecting the wire from the "+" or "-" terminal. If, for example, a short-circuit occurred which tripped the polyswitch and you corrected the short but did not disconnect the wire from the "-" terminal, the polyswitch would "see" the normal load and would continue to block current flow until reset as described has been performed.

4.2.4 Electrical Wiring

All wiring to the installed unit is made to terminal blocks on the PC boards inside the cabinet. Ensure all wiring installation conforms to any local code requirements.

4.2.4.1 Emergency Release

Emergency release of DC output at the power supply is most easily accomplished by using the unconnected "F" terminal (see Figure 1). Connect the NC contacts of the release switch between "+" and "F" and then connect the load to "-" and "F". When the emergency release contacts open, all DC power will be cut off. When the connection is to a fire alarm system, use auxiliary latching normally closed contacts. Do not use "trouble" contacts.

4.2.4.2 AC Fail Relay

The power supply is equipped with an AC fail sense SPDT relay contact. The relay coil is energized when 120VAC power is available and de-energized otherwise. The contacts are available for connection at the terminal block (see Figure 1). When AC power is available there is continuity between terminals "C" and "NO", otherwise continuity exist between "C" and "NC". The contacts are rated for 3 Amps at 30VDC or 250VAC.

4.2.4.3 Lock Relay Wiring

The lock relay terminals ("L1" and "L2") located on the CCM-1 PC board are controlled by a SPST, 2 Amp dry contact relay. Either the internal CCM-1 power supply (Figure 2) or an additional external power source (Figure 3) can be used depending on the specific installation.

If life safety is a concern (being installed on an emergency exit location) refer to all local codes regarding fire alarm release of electric locks. Follow the wiring in Figure 3 for external power supply wiring using a UL approved power supply.

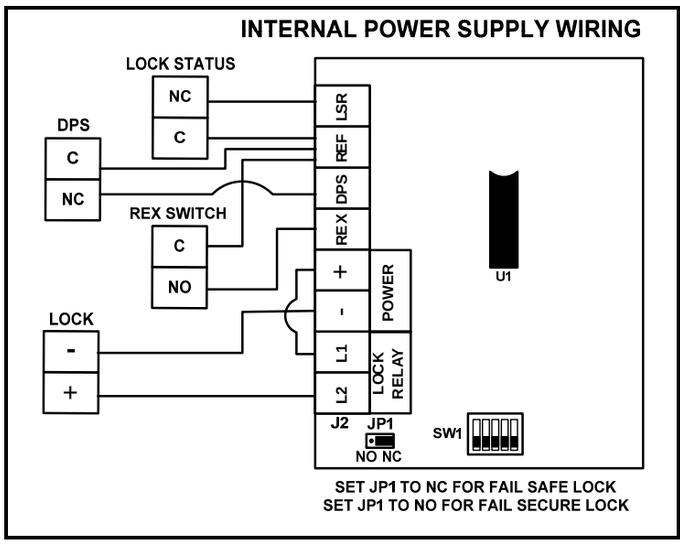

Figure 2 – Door Control Unit (DCU)

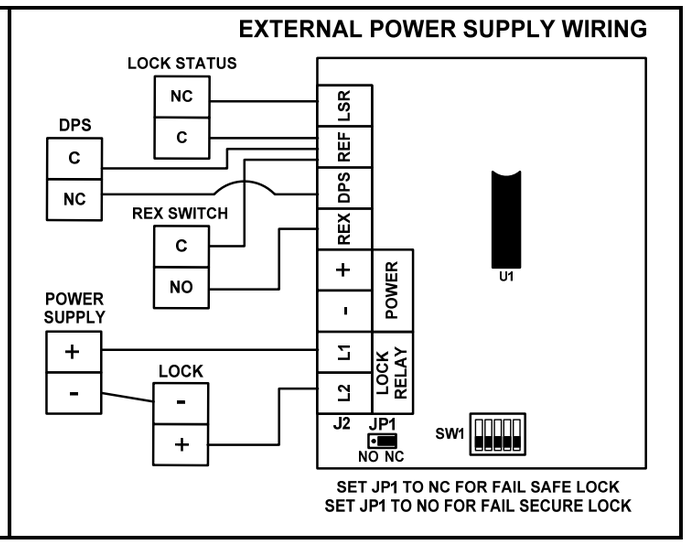

Figure 3 – Door Control Unit (DCU)

5. SYSTEM OPERATIONS

5.1 General Description of Operation

The CCM-1 provides the capability of remote security access to an opening using a telephone and monitoring and management control via a secure internet website. Setup and configuration of this remote wireless control system requires a PC with internet access and is described in the CCM-1 Web Access Quick Start Guide. Additional user selectable functions and settings that are accessed internally to the CCM-1 family are:

5.1.1 Lock Relay Jumper Function

The CCM-1 lock relay output function can be set to operate either normally open (NO) or normally closed (NC) depending on the position of jumper "JP1" (see Figure 4). For fail secure lock operations the jumper must be in the "NO" position, for fail safe operation it must be set in the "NC" position.

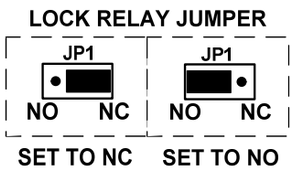

Figure 4

5.1.2 REX (Request to Exit) Function

Often, when the CCM-1 is used, provision must be made to allow people to use the door freely from the inside. If an electric strike is used, exit may be accomplished by purely mechanical means (turning the doorknob). If, on the other hand, a solenoid operated or electromagnetic lock is used, free exit is only possible if a switch on the inside releases the lock. Connection of this switch (or switches) can be accomplished using the REX input terminal of the CCM-1 (see Figures 2 and 3). When a normally open switch activates the REX terminal, the control relay of the CCM-1 will open the lock for the amount of time programmed into the CCM-1 timer. The result is the same as if the CCM-1 was used from the outside of the door. The REX terminal is activated by being connected to the "REF" (reference voltage source) terminal. Figures 2 and 3 show the simplest connection to an external normally open momentary switch. Any number of additional switches could be connected in parallel so that pressing any of them would activate the REX function. An example of when this multiple switch capability is used would be an installation with an exit button at the door and a second one at a receptionist's desk. Either could open the door for the programmed time. There are some special characteristics as to how the REX input works. First, it does not start the timer when the input is closed but rather when it reopens. This means that you can use the REX input to release the door for an extended period of time. As long as terminals "REX" and "REF" remain connected, the lock will be released. When they disconnect, the lock will remain released for the amount of time programmed. This extended release capability is useful in certain applications.

The REX input is also re-triggerable. This means that if the lock has been released and the REX input is triggered, the release time will be extended to the full value that has been programmed.

SPECIAL NOTE:
When using exit switches, the possibility must be considered that an electronic failure may occur to the CCM-1 and a person will not be able to exit. If the CCM-1 controls the only door exiting the area, additional steps should be taken to improve the reliability of exiting so as to avoid trapping someone. This can most easily be done by implementing a secondary means of releasing the lock not dependent on the CCM-1's REX input. Additional switch contacts should be used which directly control the electric lock. In the case of a fail safe lock, which should always be employed when there is only one exit path, this can be easily accomplished with "double break" wiring between the exit button, electric lock, and CCM-1.

Using a DPST or DPDT exit switch, wire it so that when the exit switch is activated, the NC contacts open which releases the fail safe lock (tied in series with lock relay). At the same time, the NO contacts directly activate the REX input. This de-energizes the lock control relay which releases the lock "a second time" for the amount of time that has been programmed. If the CCM-1 suffers a failure, the exit switch can still release the lock for safety.

ALWAYS CONSULT LOCAL BUILDING OR FIRE DEPARTMENT WHEN SECURING DOORS THAT ARE PART OF AN EMERGENCY EXIT PATH TO ENSURE COMPLIANCE WITH LOCAL CODES.

5.2 System Functions

5.2.1 Setting Lock Release Time (DIP SW2, SW3 and SW4) and Hold Open Mode

The CCM-1 will release the lock device it controls for a factory set default time of 10 seconds. This can be changed via DIP switch settings of SW2, SW3 and SW4. (For a complete illustration of DIP switch settings and their function see Figure 5 and Table C).

The CCM-1 will operate in Hold Open mode if programmed on the website to do so. In Hold Open mode, the relay will energize when activated by telephone or internet and de-energize when activated by phone or internet a second time. This function can also be set and controlled using the CelAccess™ timer option. When accessed by phone or internet, an activation time can be selected along with a selected time for the lock to deactivate. Hold Open mode is generally used for applications where the door is released all day and then secured again all night.

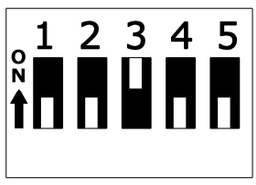

Figure 5

Default
DIP Switch
Settings

Operation	Directive	5 Position DIP		
Alarm Shunt (2 or 5 Seconds)	Seconds	SW1		
	2	OFF		
	5	ON		
Release Time (1/2 to 120 Seconds)	Seconds	SW2	SW3	SW4
	1/2	OFF	OFF	OFF
	5	ON	OFF	OFF
	10	OFF	ON	OFF
	15	ON	ON	OFF
	30	OFF	OFF	ON
	60	ON	OFF	ON
	90	OFF	ON	ON
	120	ON	ON	ON
All Access (Disabled or Enabled)	Function	SW5		
	Disabled	OFF		
	Enabled	ON		

Table C - DIP Switch Settings (defaults in bold italics)

5.2.2 Anti-Tailgating/Auto-Relock Function

When the CCM-1 is used (or the REX input is used), the lock will release for the amount of time programmed. If the door is not opened at all, the lock will re-secure when the set time expires and nothing further will happen. If the door is opened and re-closes before the time expires, it will re-secure immediately upon closure. This is called anti-tailgating and means that although you have selected a long release time, a second person will not be able to use the door after a first person has because the door re-secures immediately upon re-closure. This is done by connecting a normally closed door position switch (DPS) between terminals "DPS" and "REF"

that opens its contact when the door opens (see Figures 2 and 3 for wiring). When the door closes the switch contact closes and expires the remaining time.

Forced Door/Door Prop Alarm Function

This function provides enhanced security at the door by creating an alarm signal any time the door is forced open or left open too long while being used for entry or exit. With the function enabled, select a relatively long door open time. You will then need a lock status or door position switch whose contacts open when the door opens. To wire the lock/door switch, refer to Figures 2 and 3. If the door is forced open or remains open for a longer period of time than is set on the lock release timer, the condition will be reported to the CelAccess™ web site.

NOTE:
If this function is NOT being used, a jumper must be installed between terminals "REF" and "LSR".

5.2.3 Alarm Shunt Timer Function (DIP SW1)

The alarm shunt timer is controlled by DIP switch SW1 is designed to give a buffer between the time that the door position switch closes and the lock engages its lock status input. The factory set default is 2 seconds (See Figure 5 and Table C for settings). The setting should be selected based on the amount of time between the door position switch reporting and the lock device engaging. This is done to prevent a false notification being sent to the CelAccess™ web site.

5.2.4 All Access Notification Function (DIP SW5)

In the event that notification of any and all openings of the lock is desired (this is usually not the case, as possible unnecessary and excessive notifications will be sent to the CelAccess™ web site), the lock status input must be used and DIP switch SW5 should be turned on. Doing this will provide notification of any/all electrical and mechanical openings of the lock. The factory default is set with this function disabled.

5.3 Initial Setup

5.3.1 Temporary Access Code and Account Setup

All devices are shipped "live"…

- When power is connected, the LED on the side of the modem will blink once, and then go dark for about 1 minute while device registers on network.
- LED will start blinking when registered.
- Call 866-ZAP-OPEN (866-927-6736), enter device ID and initial access code (located inside the enclosure) when instructed. Relay should trigger in 15-20 seconds.
- Initial access code will work 10 times, and then will expire.
- Please use the CCM-1 Web Access Quick Start Guide for account setup and additional instructions.

6. SPECIALIZED MOUNTING BRACKETS

- 3" Pole/Post Mount Kit – This bracket kit is designed for mounting a CCM-1N or 2N directly to a fence post or pole up to 3" [76mm] in diameter. These kits are available through Securitron or their authorized distributors.

7. MAINTENANCE

7.1 Cleaning Methods

- Use canned/compressed air to blow out dirt and dust from inside the cabinet.
- Cleaning once a year is recommended.
- Clean every six months in very dusty environments.
- Cleaning more often may be required in outdoor applications.

Troubleshooting

Problem	LED on modem does not start blinking...
Solution	This is probably a cellular coverage issue. Move antenna if possible. Signal boosters are available for additional fee.

Problem	Computer does not accept code...
Solution	Be sure to enter the four digit device ID, then the pound key, then the four digit initial code and the pound key. This combination is unique for each device.

Problem	Computer accepts code, but does not trigger device...
Solution	Check the relay with ohm meter. Call CelAccess™ customer service 972-231-1999.

IF PROBLEMS PERSIST CALL SECURITRON TOLL FREE
(800) MAG-LOCK
(800) 624-5625