Securitron Magnalock Corp.
550 Vista Boulevard
Sparks, NV 89434

Tel 775.355.5625
Fax 775.355.5633
info@securitron.com
www.securitron.com

ASSA ABLOY, the global leader in door opening solutions

SOLAR CELLULAR CONTROL MODULES CCM-1N-S10 AND CCM-1N-S20 INSTALLATION AND OPERATING INSTRUCTIONS

1. INTRODUCTION

The Solar Cellular Control Module CCM-1N-S combines Securitron's renowned power supply and access control technology with an intelligent cellular and internet (web) based management system. This unit provides a stand-alone remote controlled access of an electrically actuated lock system using a telephone or via the internet. The Solar CCM-1N-S, contained in a NEMA-3R rated cabinet, is specifically designed for outdoor applications and is provided with its own separately mounted, adjustable solar PV array power panel and battery backup. Each unit operates at 12 VDC and provides a variety of easily selectable operating functions. This manual is intended to provide the installation, electrical requirements, functional options and selectable settings required to successfully install a Solar CCM-1N-S unit.

Note: CelAccess™ use requires AT&T™ Cellular Service. To verify coverage in the required area go to www.wireless.att.com/coverageviewer.

2. SPECIFICATIONS

CCM-1N-S Cabinet	10 Watt PV Array Panel	20 Watt PV Array Panel
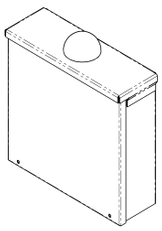		
MODEL	CCM-1N-S10/CCM-1N-S20	
Use/Environment	Outdoor (NEMA-3R)	
Cabinet Weight (without batteries)	14 Lbs [6.4 kg]	
Cabinet Dimensions: Length	12.8" [325mm]	
Height	13.6" [345mm]	
Depth	4.7" [119mm]	
Voltage	12 Volts DC	
*Maximum Output Current – At Rest	*Up to 30mA	
*Maximum Output Current – Operating	*Up to 95mA	
Operating Temperature Range (with batteries)	-4° to +113° F [-20° to +45° C]	

*Number of daily lock operations may vary due to solar activity and system current draw.

3. RECOMMENDED TOOLS

- Hammer
- Center Punch
- Power Drill
- Drill bits
- Wrenches
- Pliers, vise grip
- Screwdrivers: Phillips & 1/8" Flat Blade
- Fish Tape or Lead Wire
- Wire Strippers/Cutter
- Multimeter

4. INSTALLATION INSTRUCTIONS

It is recommended that a site survey be performed to determine the mounting location prior to installation. The following should be considered:

- The area must have cellular coverage with a sufficient signal.
- The unit should be placed in a position without obstruction of the sun which will allow optimum use of the solar panel.
- Physical strength of mounting areas should provide adequate support of the installed unit.
- Adequate space should be provided for ventilation. Ensure that there is at least 2" of unobstructed space provided around the four sides of the enclosure.
- Ensure wiring can be routed to protect from damage due to intrusion or vandalism. (The enclosure is provided with knock-outs for conduit connections).

© Copyright, 2009, all rights reserved

P/N 500-22230
Rev. B, 8/09

4.1 Physical Installation

The Solar CCM-1N-S is rated for outdoor use and is specifically designed to be affixed to a pole or post up to 2" O.D. (outer diameter) using the included hardware. Use short U-bolt in lower mounting holes to allow room for battery. A bracket kit accessory package for larger diameters is also available (see Section 7). A drop-in hasp for a padlock (not included) has been furnished to secure the cabinet cover.

The CCM-1N-S is furnished with its own integrated antenna (dome) affixed to the top of the unit. A pole/post mounted adjustable solar panel is provided to be mounted above the Solar CCM-1N-S. Please see Section 6 for PV array panel installation and adjustment information.

4.2 Electrical Installation

4.2.1 Power Controller Characteristics

Securitron's Solar CCM-1N-S utilizes a sophisticated power controller which incorporates advanced technology and series switching, pulse width modulation (PWM) charging. The battery charging process has been optimized for longer battery life and improved system performance. Many specifications of the controller are unique. Although the controller is very simple to use, please take the time to read this manual and become familiar with its functions. This will help to make full use of the many advantages the controller can provide to the PV system being used.

4.2.2 Controller Safety

- SAVE THESE INSTRUCTIONS! - This manual contains important instructions that should be followed during installation and maintenance of the controller.
- WARNING! - Be very careful when working with batteries. Lead acid batteries can generate explosive gases, and short circuits can draw thousands of amps from the battery. Read and follow all instructions provided with the battery.
- Do not exceed the voltage or current ratings of the controller. Use only with a 12 Volt battery rated between 5Ah and 20Ah.
- DO NOT short circuit the PV array or load while connected to the controller. This will DAMAGE the controller.
- The controller should be protected from direct sunlight. Ensure adequate space for air flow around the controller.
- Pressure terminal connectors are not required. Use only copper wire with a minimum 75°C insulation rating and between 10 AWG (5.2 mm2) and 14 AWG (2.1 mm2) wire gage.
- The negative system conductor should be properly grounded. All grounding and wiring should comply with local codes.

4.2.3 Controller Wiring

The six (6) system connections to the controller terminals are numbered "1" to "6" on the label as shown in Figure 1. It is recommended that the connections be made in order from 1 to 6.

1. Connect the BATTERY first. Use care that bare wires do not touch the metal case of the controller.
2. Connect the SOLAR (PV array) next. The green LED indicator will light if sunlight is present.
3. Connect the LOAD last. This model includes a low voltage disconnect (LVD). If the red LED indicator lights, the battery capacity is low and should be charged before completing the system installation.

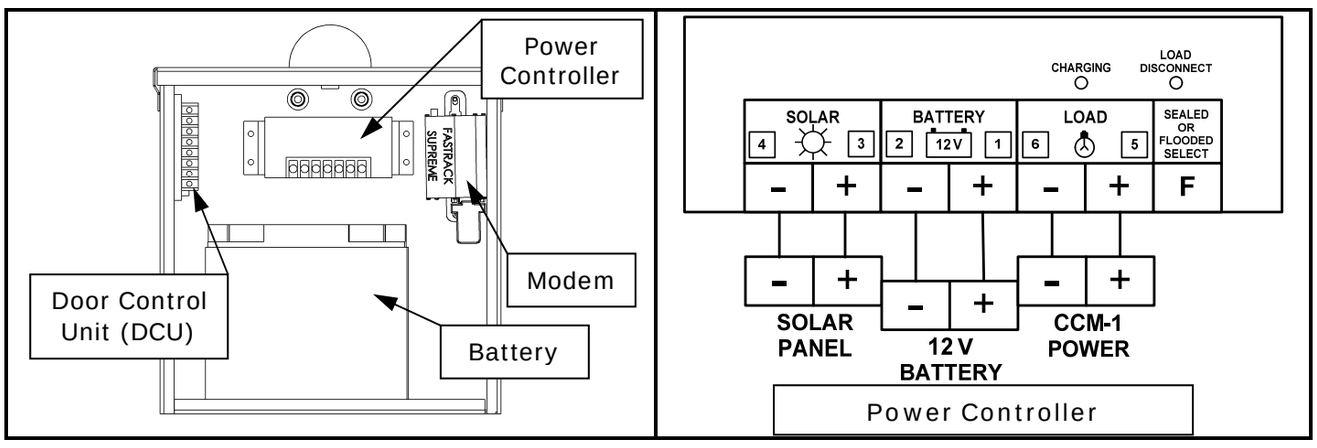

Figure 1

Notes:

- The controller is shipped with a jumper installed. This sets the controller for charging SEALED batteries. If a FLOODED battery is being used, simply remove the jumper to optimize the battery charging for a flooded battery. If the jumper is connected again, the charging will return to the set-points for a sealed battery.
- For safety and the most effective lightning protection, the negative conductor of the PV system should be properly grounded. The controller connects the PV-negative, Battery negative and Load- negative internally per UL recommendations. No switching is done in the negative current path.

4.2.4 Operating Characteristics

4.2.4.1 Polarity Protection

The controller is generally protected from reversed connections, but the system operator and other equipment will be at risk when polarities (+ and –) are reversed. Carefully check before making each connection to ensure that the polarity is correct.

4.2.4.2 LED Indicators

Green LED:

The green LED indicator located on the power controller is lit whenever sunlight is available for battery charging. The green LED will turn off at night. Because the controller uses a PWM constant voltage charging process, there is usually some amount of energy going into the battery at all times. Although the charging current falls to very low levels when the battery reaches full charge, the green LED will continue to stay ON (during the daytime). This is to indicate that the controller is working and that energy is available from the PV array for charging.

Red LED:

The controller includes an automatic load disconnect (LVD) feature along with a red LED indicator. Whenever the battery charge state falls below the LVD set-point, the load will be disconnected and the red LED will light. This indicates that the controller has disconnected the load to protect the battery from further discharge and possible damage. After some period of recharging the battery, such that it recovers to approximately 40 to 50 percent of its rated capacity, the load will automatically be reconnected and the red LED will turn off.

4.2.4.3 Controller Features and Functions

Low Voltage Disconnect (LVD):

If the battery falls below 11.5 volts, the load is disconnected from the battery to protect against harmful deep discharges. A 2-second delay prevents load disconnects from transients. The load is automatically reconnected when the battery voltage recovers to 12.6 volts.

Battery Disconnect:

If the battery is disconnected during the daytime, the PV array will continue to provide power to the controller. The controller will immediately go into PWM and provide power at a constant voltage to the load. This may continue as long as power is available from the PV array.

Auxiliary Generators:

Engine generators and other sources of power may be connected directly to the battery for charging. It is not necessary to disconnect the controller from the battery. However, do not use the controller to regulate these other generators.

Reverse Current:

The controller prevents the battery from discharging through the PV array at night. There is no need to install a blocking diode for this purpose.

Noise:

The controller circuit minimizes switching noise and filters all noise output to extremely low levels when the system is properly grounded. If noise is present in a telecom load, it is most likely due to a grounding problem in the system.

4.2.5 Electrical Wiring

All wiring to the installed unit is made to terminal blocks on the PC boards inside the cabinet. For ease of access and wiring, the door control unit (DCU) PC board is furnished with a removable terminal block connector. Ensure all wiring installation conforms to any local code requirements.

4.2.5.1 Lock Relay Wiring

The lock relay terminals ("L1" and "L2") located on the CCM-1N-S PC board (shown in Figure 2) are controlled by a SPST, 2 Amp dry contact relay.

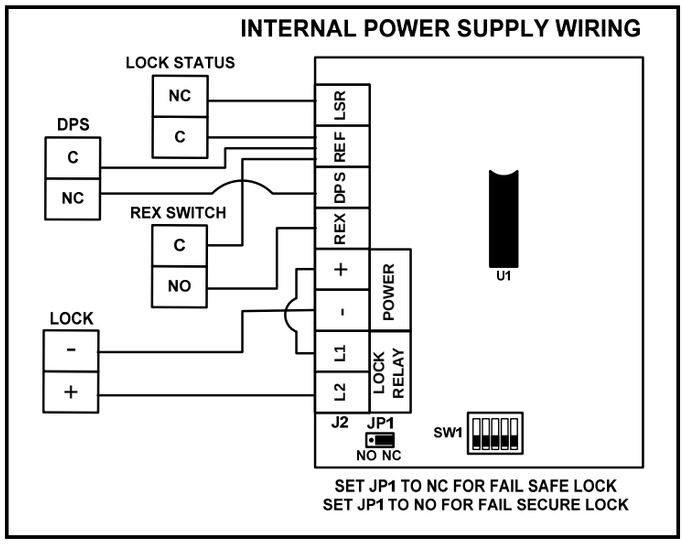

Figure 2 – Door Control Unit (DCU)

5. SYSTEM OPERATIONS

5.1 General Description of Operation

The CCM-1N-S provides the capability of remote security access to an opening using a telephone and monitoring and management control via a secure internet website. Setup and configuration of this remote wireless control system requires a PC with internet access and is described in the CCM-1N-S Web Access Quick Start Guide. Additional user selectable functions and settings that are accessed internally to the Solar CCM-1N-S are:

5.1.1 Lock Relay Jumper Function

The CCM-1N-S lock relay output function can be set to operate either normally open (NO) or normally closed (NC) depending on the position of jumper "JP1" (see Figure 3). For fail secure lock operations the jumper must be in the "NO" position, for fail safe operation it must be set in the "NC" position.

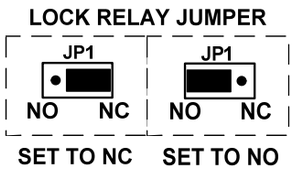

Figure 3

5.1.2 REX (Request to Exit) Function

Often, when the CCM-1N-S is used, provision must be made to allow people to use the door freely from the inside. If an electric strike is used, exit may be accomplished by purely mechanical means (turning the doorknob). If, on the other hand, a solenoid operated or electromagnetic lock is used, free exit is only possible if a switch on the inside releases the lock. Connection of this switch (or switches) can be accomplished using the REX input terminal of the CCM-1N-S (see Figure 2). When a normally open switch activates the REX terminal, the control relay of the CCM-1N-S will open the lock for the amount of time programmed into the CCM-1N-S timer. The result is the same as if the CCM-1N-S was used from the outside of the door. The REX terminal is activated by being connected to the "REF" (reference voltage source) terminal. Figure 2 shows the simplest connection to an external normally open momentary switch. Any number of additional switches could be connected in parallel so that pressing any of them would activate the REX function.

An example of when this multiple switch capability is used would be an installation with an exit button at the door and a second one at a receptionist's desk. Either could open the door for the programmed time. There are some special characteristics as to how the REX input works. First, it does not start the timer when the input is closed but rather when it reopens. This means that you can use the REX input to release the door for an extended period of time. As long as terminals "REX" and "REF" remain connected, the lock will be released. When they disconnect, the lock will remain released for the amount of time programmed. This extended release capability is useful in certain applications.
The REX input is also re-triggerable. This means that if the lock has been released and the REX input is triggered, the release time will be extended to the full value that has been programmed.

SPECIAL NOTE:
When using exit switches, the possibility must be considered that an electronic failure may occur to the CCM-1N-S and a person will not be able to exit. If the CCM-1N-S controls the only door exiting the area, additional steps should be taken to improve the reliability of exiting so as to avoid trapping someone. This can most easily be done by implementing a secondary means of releasing the lock not dependent on the CCM-1N-S's REX input. Additional switch contacts should be used which directly control the electric lock. In the case of a fail safe lock, which should always be employed when there is only one exit path, this can be easily accomplished with "double break" wiring between the exit button, electric lock, and CCM-1N-S.

Using a DPST or DPDT exit switch, wire it so that when the exit switch is activated, the NC contacts open which releases the fail safe lock (tied in series with lock relay). At the same time, the NO contacts directly activate the REX input. This de-energizes the lock control relay which releases the lock "a second time" for the amount of time that has been programmed. If the CCM-1N-S suffers a failure, the exit switch can still release the lock for safety.

ALWAYS CONSULT LOCAL BUILDING OR FIRE DEPARTMENT WHEN SECURING DOORS THAT ARE PART OF AN EMERGENCY EXIT PATH TO ENSURE COMPLIANCE WITH LOCAL CODES.

5.2 System Functions

5.2.1 Setting Lock Release Time (DIP SW2, SW3 and SW4) and Hold Open Mode

The CCM-1N-S will release the lock device it controls for a factory set default time of 10 seconds. This can be changed via DIP switch settings of SW2, SW3 and SW4. (For a complete illustration of DIP switch settings and their function see Figure 4 and Table A).

The CCM-1N-S will operate in Hold Open mode if programmed on the website to do so. In Hold Open mode, the relay will energize when activated by telephone or internet and de-energize when activated by phone or internet a second time. This function can also be set and controlled using the CelAccess™ timer option. When accessed by phone or internet, an activation time can be selected along with a selected time for the lock to deactivate. Hold Open mode is generally used for applications where the door is released all day and then secured again all night.

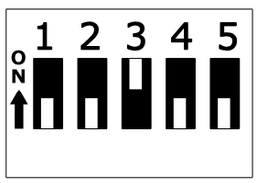

Figure 4

Default
DIP Switch
Settings

Operation	Directive	5 Position DIP		
Alarm Shunt (2 or 5 Seconds)	Seconds	SW1		
	2	OFF		
	5	ON		
Release Time (1/2 to 120 Seconds)	Seconds	SW2	SW3	SW4
	1/2	OFF	OFF	OFF
	5	ON	OFF	OFF
	10	OFF	ON	OFF
	15	ON	ON	OFF
	30	OFF	OFF	ON
	60	ON	OFF	ON
	90	OFF	ON	ON
	120	ON	ON	ON
All Access (Disabled or Enabled)	Function	SW5		
	Disabled	OFF		
	Enabled	ON		

Table A - DIP Switch Settings (defaults in bold italics)

5.2.2 Anti-Tailgating/Auto-Relock Function

When the CCM-1N-S is used (or the REX input is used), the lock will release for the amount of time programmed. If the door is not opened at all, the lock will re-secure when the set time expires and nothing further will happen. If the door is opened and re-closes before the time expires, it will re-secure immediately upon closure. This is called anti-tailgating and means that although you have selected a long release time, a second person will not be able to use the door after a first person has because the door re-secures immediately upon re-closure. This is done by connecting a normally closed door position switch (DPS) between terminals "DPS" and "REF" that opens its contact when the door opens (see Figure 2 for wiring). When the door closes the switch contact closes and expires the remaining time.

5.2.3 Forced Door/Door Prop Alarm Function

This function provides enhanced security at the door by creating an alarm signal any time the door is forced open or left open too long while being used for entry or exit. With the function enabled, select a relatively long door open time. You will then need a lock status or door position switch whose contacts open when the door opens. To wire the lock/door switch, refer to Figure 2. If the door is forced open or remains open for a longer period of time than is set on the lock release timer, the condition will be reported to the CelAccess™ web site.

NOTE:
If this function is NOT being used, a jumper must be installed between terminals "REF" and "LSR".

5.2.4 Alarm Shunt Timer Function (DIP SW1)

The alarm shunt timer is controlled by DIP switch SW1 is designed to give a buffer between the time that the door position switch closes and the lock engages its lock status input. The factory set default is 2 seconds (See Figure 4 and Table A for settings). The setting should be selected based on the amount of time between the door position switch reporting and the lock device engaging. This is done to prevent a false notification being sent to the CelAccess™ web site.

5.2.5 All Access Notification Function (DIP SW5)

In the event that notification of any and all openings of the lock is desired (this is usually not the case, as possible unnecessary and excessive notifications will be sent to the CelAccess™ web site), the lock status input must be used and DIP switch SW5 should be turned on. Doing this will provide notification of any/all electrical and mechanical openings of the lock. The factory default is set with this function disabled.

5.3 Initial Setup

5.3.1 Temporary Access Code and Account Setup

All devices are shipped "live"…

- When power is connected, the LED on the side of the modem will blink once, and then go dark for about 1 minute while device registers on network.
- LED will start blinking when registered.
- Call 866-ZAP-OPEN (866-927-6736), enter device ID and initial access code (located inside the enclosure on the modem) when instructed. Relay should trigger in 15-20 seconds.
- Initial access code will work 10 times, and then will expire.
- Please use the CCM-1N-S Web Access Quick Start Guide for account setup and additional instructions.

6. PV ARRAY PANEL INSTALLATION

6.1 INSTALLING THE PANEL

The following exploded illustration Figure 5 shows the included hardware required to properly mount the array panel to a vertical pole. (10 Watt PV array panel shown).

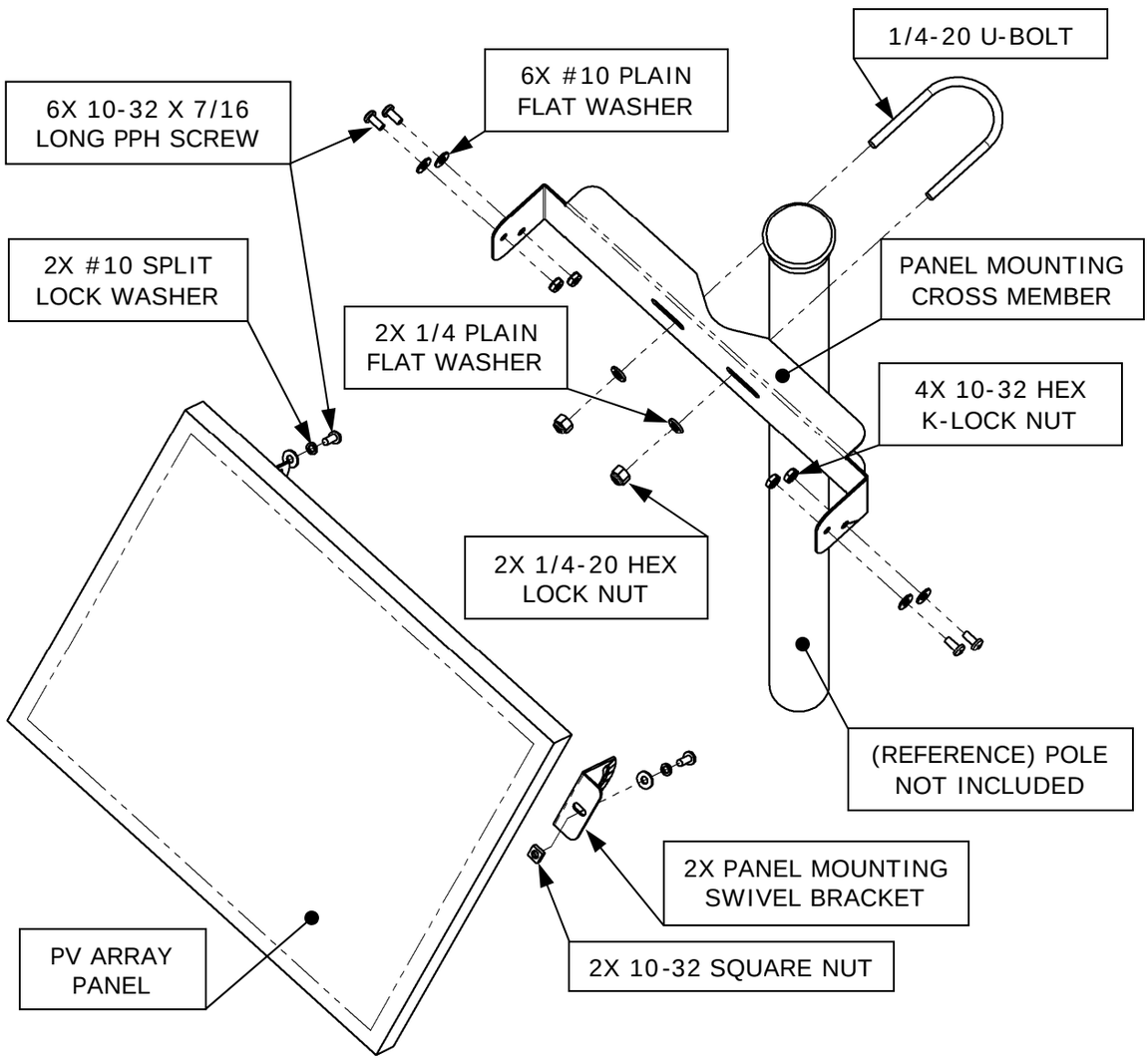

Figure 5

The swivel brackets are to be mounted to the sides of the array panel as shown in Figure 6.

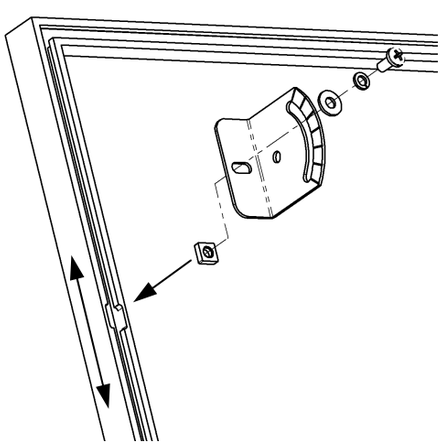

1. Insert the square nuts into the cutouts at each side of the panel and slide in slot to initial position.
2. Assemble swivel brackets with the included hardware to the nuts.
3. Tighten screws securely when brackets are adjusted to the desired position.

Figure 6

6.2 ADJUSTING THE PANEL

Figure 7 shows the PV array panel mounted to a vertical pole.

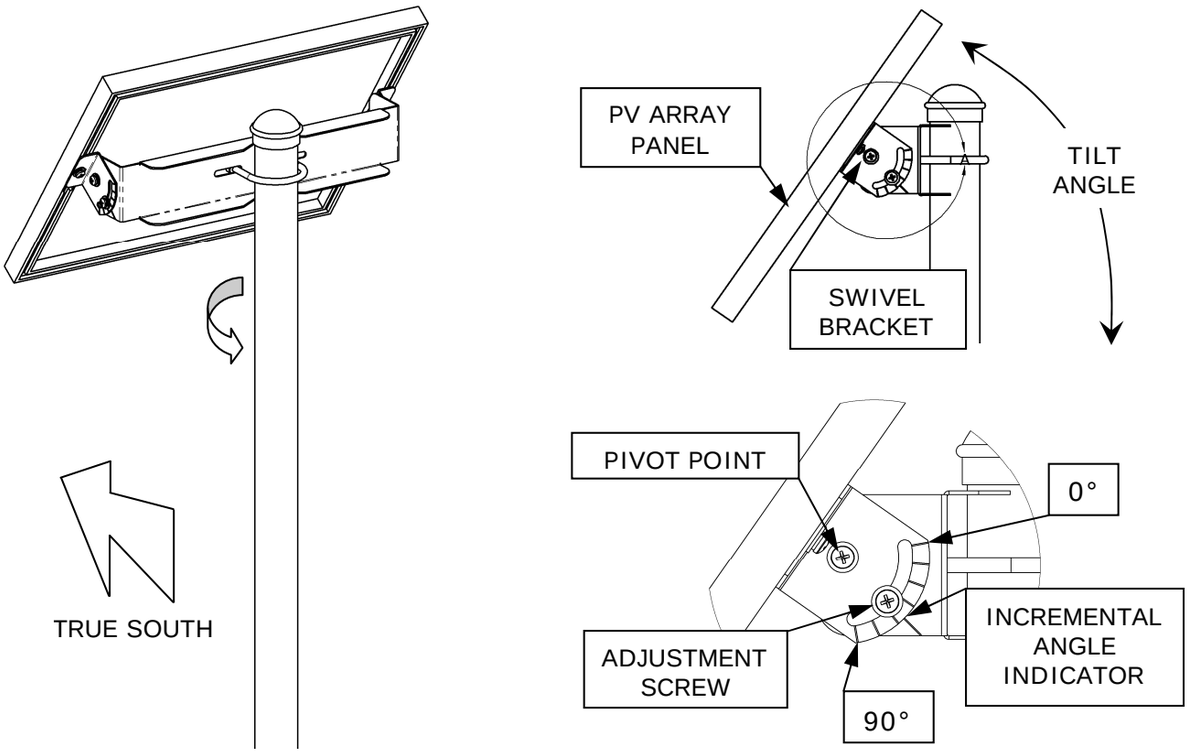

Figure 7

6.2.1 DIRECTION

The panel can be adjusted axially to the pole by loosening the U-bolt and rotating the cross member to face the desired true South direction.

It is important for proper solar power system operation that the array panel be oriented toward true South (if you are located in the northern hemisphere). The directions of magnetic South and true South differ from one another depending on geographic location. This variance is called declination.

Check the declination for your region in order to extrapolate true South from a compass heading of magnetic South. There is a map available online which shows the magnetic declination for various locations in the US at: http://www.securitron.com/en/site/securitron/Library/Solar-Product-Information. (For example, true south in central Texas falls between the 7 degree East and the 8 degree East lines. This means that, for optimum exposure, the solar panel should be aligned 7-8 degrees east of magnetic South (on a compass).

6.2.2 TILT ANGLE

The panel can be adjusted to the desired tilt angle using the swivel bracket at each side of the panel. Simply loosen the pivot and the adjustment screw at each bracket. The brackets are marked at 15° increments from 0° (horizontal) to 90° (vertical). Align the indicator on the bracket to the desired angle, and then tighten the screws.

Optimum tilt angle is measured from horizontal and can be measured using the indication marks on the panel swivel brackets. As a general rule the tilt angle of the panel should be set as follows:

- For year-round applications the tilt angle should be set equal to the location latitude (e.g. latitude 40° North = tilt angle 40°).
- For winter applications the tilt angle should be set to the location latitude plus 15° (e.g. latitude 40° North + 15° = tilt angle 55°).
- For summer applications the tilt angle should be set to the location latitude minus 15° (e.g. latitude 40° North - 15° = tilt angle 35°).

Note: Seasonally adjusting the tilt angle of the PV array panel can significantly increase power production for year-round loads.

7. SPECIALIZED MOUNTING BRACKETS

- PMK-3: 3" Pole/Post Mount Kit – This bracket kit is designed for mounting a Solar CCM-1N-S directly to a fence post or pole up to 3" [76mm] O.D. This kit is available through Securitron or their authorized distributors.

8. MAINTENANCE

8.1 Cleaning Methods

- Use canned/compressed air to blow out dirt and dust from inside the cabinet.
- Cleaning once a year is recommended.
- Clean every six months in very dusty environments.
- Cleaning more often may be required in outdoor applications.

Troubleshooting (CCM-1N-S)

Problem	LED on modem blinks but does not go solid…
Solution	This is probably a cellular coverage issue. Check coverage and signal strength. Signal boosters are available for additional fee.

Problem	Computer does not accept code…
Solution	Be sure to enter the four digit device ID, then pound key, then the four digit initial code and pound key. This combination is unique for each device.

Problem	Computer accepts code, but does not trigger device…
Solution	Check the relay with ohm meter. Call CelAccess™ customer service 972-231-1999.

Troubleshooting (Solar Controller)

Problem	Battery is not charging…
Solution	a. Check the green LED indicator. The green "CHARGING" LED should be on if it is daytime. b. Check that the proper battery type (sealed or flooded) has been selected. c. Check that all wire connections in the system are correct and tight. Check the polarity (+ and –) of the connections. d. Measure the PV array open-circuit voltage and confirm it is within normal limits. If the voltage is low or zero, check the connections at the PV array itself. Disconnect the PV from the controller when working on the PV array. e. Check that the load is not drawing more energy than the PV array can provide. f. Check if there are excessive voltage drops between the controller and the battery. This will cause undercharging of the battery. g. Check the condition of the battery. Determine if the battery voltage declines at night with no load. If unable to maintain its voltage, the battery may be failing. h. Measure the PV voltage and the battery voltage at the controller terminals. If the voltage at the terminals is the same (within a few tenths of volts) the PV array is charging the battery. If PV voltage is close to the open circuit voltage of the panels and the battery voltage is low, the controller is not charging the batteries and may be damaged.

Problem	Battery Voltage is too high…
Solution	a. First check the operating conditions to confirm that the voltage is higher than specifications. Consider the temperature compensation of the controller's PWM set-point. For example, 15 at 0°C the controller will regulate at about 15.1 volts (for 12 volt flooded batteries). b. Check that the proper battery type (sealed or flooded) has been selected. c. Check that all wire connections in the system are correct and tight. d. Disconnect the PV array and momentarily disconnect the lead from the "BATTERY" positive terminal. Reconnect the battery terminal and leave the PV array disconnected. The green charging LED should not be lit. Measure the voltage at the "SOLAR" terminals (with the array still disconnected). If the green charging light is on or battery voltage is measured at the "SOLAR" terminals, the controller may be damaged.

Problem	Load not operating properly...
Solution	a. Check that the load is turned on. Check that no system fuses are defective. Check that no system circuit breakers are tripped. Remember that there are no fuses or circuit breakers inside the controller. b. Check connections to the load, and other controller and battery connections. Make sure voltage drops in the system wires are not too high. c. Check for proper LED indications on the controller. If the red "LOAD DISCONNECT" LED is on, the load has been disconnected due to low battery voltage. This is generally a normal state when the load exceeds the PV array output due to weather and other sunlight conditions. d. Measure the voltage at the controller "BATTERY" terminals. If this voltage is above the LVD, the load should have power. Then measure the voltage at the controller "LOAD" terminals, and if there is no voltage present, the controller may be defective.

IF PROBLEMS PERSIST CALL SECURITRON TOLL FREE
(800) MAG-LOCK
(800) 624-5625