SECURITRON POWER SUPPLY MODEL BPS-12/24-1
OPERATION AND INSTALLATION INSTRUCTIONS

1. DESCRIPTION

Securitron's Model **BPS-12/24-1** is a field selectable 12 volt DC or 24 volt DC, 1 Amp power supply delivered in a **single lockable enclosure** with the line voltage connection to be made by screw terminals. The unit features a regulated output with an independent sealed lead acid/gel cell battery charging capability. The voltage levels of the dedicated battery charging circuit track the selector switch SW1 and are indirectly current limited to a maximum of 100mA. **The output MUST NOT be adjusted!** This unit meets **Class 2** electrical requirements, which means under the National Electrical Code that output wiring need not be in conduit. Always **check with your local building department** to make sure you are complying with applicable wiring codes before installing these units. (Canada only: For C-UL listed applications the unit shall be installed in accordance with Part 1 of the Canadian Electrical Code). **Note that a special version of the BPS-12/24-1 operates on 220 VAC input. This carries the part number: BPSH-12/24-1 and has not been investigated by UL.**

2. SAFETY

Two hazards are present in the BPS-12/24-1 supply. Line voltage input presents a high voltage shock hazard and the battery output presents a high energy hazard. If shorted, the battery output can generate sufficient heat to ignite some materials. To insure safety, note first that the cover LED is on whenever the supply offers danger, which is either if it is receiving line voltage or if batteries are operating. **The supply must only be opened by trained service personnel. The AC Power Green LED located on the control board is lit when AC voltage is present on the Red, Orange and Yellow transformer wires. The DC Power Red LED is lit when the supply is receiving line voltage or if the batteries are operating.**

WARNING: If a battery pack is installed, the battery pack voltage must match the setting of the 12V/24V selector switch on the control board. If a 12V battery is installed the 12V/24V selector switch must be set to 12V. If a 24V battery is installed the 12V/24V selector switch must be set to 24V.

3. OPERATING CHARACTERISTICS

3.1 LINE VOLTAGE INPUT

120 VAC should be input to terminals "H", "N", "G", as shown in the drawing. The line voltage current drawn by the power supply module will be approximately 500 mA. **Note that a special version of the power supply (BPSH-12/24-1) accepts 220 VAC input.**

3.2 DC OUTPUT AND VOLTAGE ADJUSTMENT

The DC voltage of the supply is selected by the **12V/24V Selector Switch.** The supply is capable of outputting 1 Amp when set at precisely 12V or 24V DC.

3.3 LED INDICATORS

The AC Power **Green LED** located on the control board is lit when AC voltage is present on the Red and Orange transformer wires. The DC Power **Red LED** is lit when the device is supplying DC voltage or if the batteries are supplying the operating power. The front cover LED is lit when voltage is present on the power supply before the Polyswitches. The status of LEDs can be used to diagnose certain fault conditions and are listed in the table below:

© Copyright, 2011, all rights reserved

LED DIAGNOSTIC TABLE

RED (DC) *on board*	GREEN (AC) *on board*	DESCRIPTION
ON	ON	Normal Operation
ON	OFF	No AC, Battery backup is powering output
OFF	ON	No DC output, Polyswitch may be tripped
OFF	OFF	No AC, no battery or Polyswitch may be tripped

The front cover RED (DC) LED is lit when DC voltage is sensed before the Polyswitches. The RED LED (DC) on the control board is lit when DC voltage is sensed after the output Polyswitch at the DC+ Output. If the front cover RED (DC) LED is lit and the RED (DC) LED on the control board is not lit, the output Polyswitch may be tripped.

3.4 BATTERY CHARGING CAPABILITY

The power supply incorporates a battery charging circuit appropriate for standby rated sealed lead acid or gel cell batteries. **Dry cell or NICAD batteries must not be used.** Batteries are an option. The power supply can be used with or without them. The battery pack of the appropriate voltage, **matching the 12V/24V Selector Switch,** is merely connected to the red and black battery leads following correct polarity. The batteries will be kept charged at all times by the power supply acting in concert with the components on the board. In the event of a line voltage power failure, the batteries will automatically drive the load. If the emergency release terminals are opened, battery power will, however, be cut off just as normal power from the power supply would be.

Figure 1: BATTERY PACK SELECTION

Chart to determine the size of the battery pack

CURRENT DRAW	*1HR*	*2HR*	*4HR*	*UL STD*	*8HR*	*16HR*	*24HR*	*48HR*	*72HR*
150mA	5AH	5AH	5AH	5AH	5AH	5AH	8AH	8AH	12AH
300mA	5AH	5AH	5AH	5AH	5AH	8AH	12AH	16AH	NA
500mA	5AH	5AH	5AH	5AH	8AH	12AH	16AH	NA	NA
750mA	5AH	5AH	8AH	12AH	12AH	16AH	20AH	NA	NA
900mA	5AH	5AH	8AH	12AH	12AH	NA	NA	NA	NA

BATTERIES MUST BE SEALED LEAD ACID TYPES.

THIS CHART IS VALID IF BATTERIES ARE OPERATED AT ROOM TEMPERATURE.

BATTERIES SHOULD BE REPLACED AFTER 5 YEARS OF USE.

The components utilized on the unit for battery charging function for battery packs up to 20 Amp hours in capacity whether 12 or 24 volts. Note that certain long backup times are not achievable with the maximum size of the battery packs ("N/A" appears in the chart). Consult the battery pack chart to calculate the correct battery pack based on desired backup time and the current drawn by the load. **Note that batteries must be replaced at least every 5 years as that is their maximum operating life.**

3.5 CIRCUIT POLYSWITCHES AND FUSING

A **1 Amp AC fuse** is on the board together with 2 each **2.5 Amp DC Polyswitch**. The AC fuse is on the hot 120 VAC input and protects against a transformer internal short. A short in the DC load will not blow the AC fuse as the power supply is short-circuit protected. If more than its rated output is attempted to be drawn, it will shut off.

A DC short, therefore, cannot damage the power supply but still will cause problems as the load will be shut off. To protect against a short circuit when batteries are being employed, a **2.5 Amp DC Polyswitch** breaker is provided. The Polyswitch functions as an automatic circuit

breaker. If it receives an overload, it rapidly cuts the current down to a small leakage current (about 100 mA). If this happens there is a **reset procedure. All current must be removed from the Polyswitch for a period of 10 seconds**. You do this by simply disconnecting the wire from the "+" or "-" terminal. If, for example, a short circuit appeared which tripped the Polyswitch and you corrected the short but did not disconnect the wire from the "-" terminal, the Polyswitch would "see" the normal load and would continue to block current flow until reset in the manner just described.

3.6 INSTALLATION CLEARANCE

Adequate space must be provided for power supply ventilation. Be sure there is at least 2 inches of unobstructed space provided around the side of the power supply.

The enclosure is provided with knockouts for conduit connection. Use upper knockouts for **High Voltage AC** wire routing and the lower knockouts for **Low Voltage DC** wire routing.

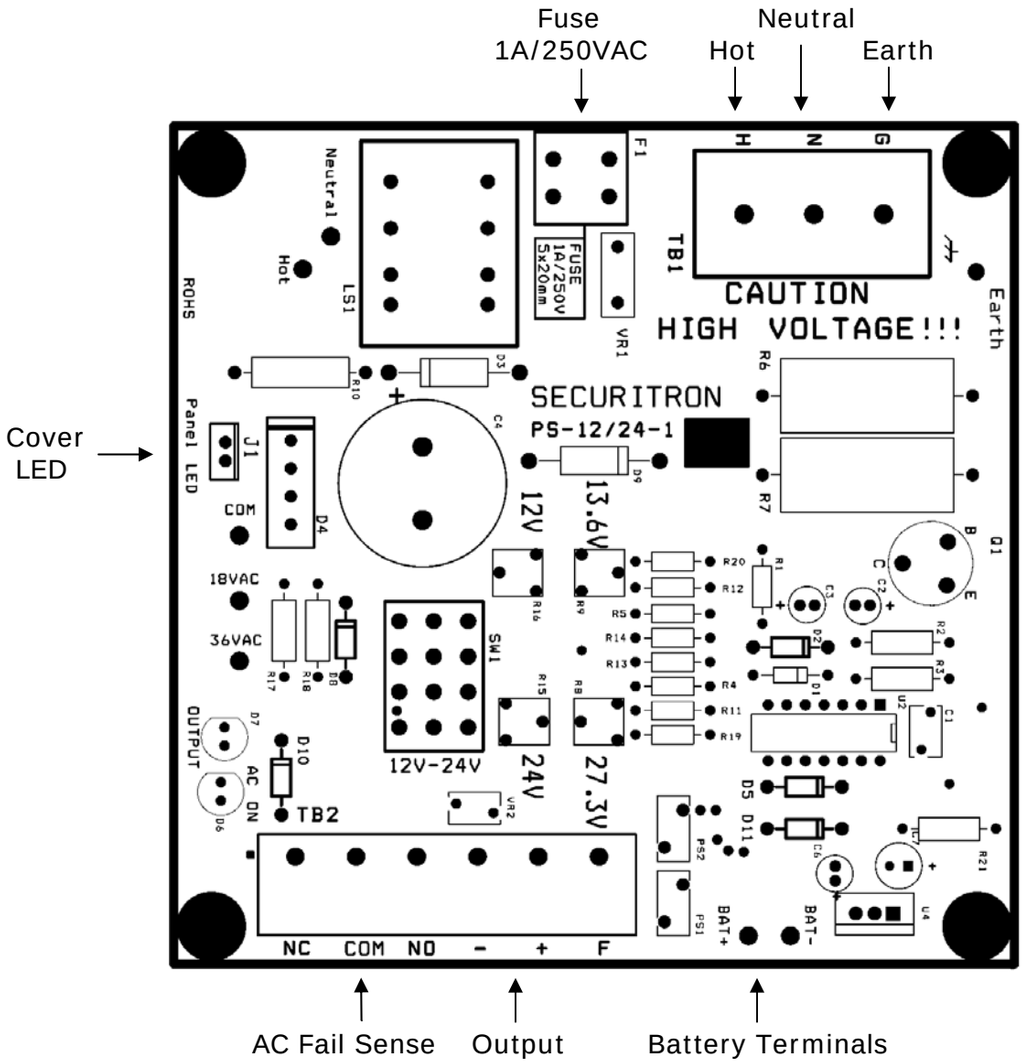

Figure 2: Wiring

3.7 EMERGENCY RELEASE

Emergency release of DC output at the power supply is most easily accomplished by using the unconnected "F" terminal. Connect the NC contacts of the release switch between "+" and "F" and then connect the load to "-" and "F". When the emergency release contacts open, all DC power will be cut off. When the connection is to a UL listed fire alarm system, use **auxiliary latching normally closed contacts.** Do not use "trouble" contacts. Note the drawing to the right.

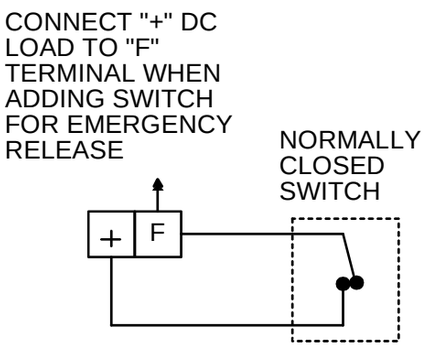

AC Fail

The power supply is equipped with an AC fail sense isolated solenoid contact. The solenoid coil is energized when AC mains power is available and de-energized otherwise. The contacts are available for connection at the TB2 terminal block. When AC mains power is available there is continuity between TB2 terminals COM and NO, otherwise continuity exist between COM and NC. The contacts are rated for 3A at 30VDC or 250VAC.

4. MAGNACARE® LIFETIME REPLACEMENT WARRANTY

For warranty information visit: www.securitron.com/en/site/securitron/About/MagnaCare-Warranty/