AQE30E

Power over Ethernet Single Port Extractor

Installation Manual

SECURITRON

ASSA ABLOY

Description

The AQE30E Power over Ethernet (PoE) power extractor is designed to provide 12 volts (V) direct current (DC) and up to a maximum of 25 watts (W) of output power to a non-PoE Internet Protocol (IP) device (e.g., IP camera) from a PoE source.

RJ45 connectors are provided for data input and output, and two terminal strips are provided for the DC output and power level selection.

The AQE30E is compatible with the Institute of Electrical and Electronics Engineers (IEEE) Standard 802.3, "Ethernet," and is capable of accepting PoE connections of Mode A, Mode B, or Mode A and B simultaneously.

Operation with reverse polarity at the PoE input is also supported.

Regulatory Information

The equipment discussed within this manual has been tested to the following standards:

- UL Standard UL294b, "The Standard of Safety for Access Control System Units"
- International Electrotechnical Commission (IEC) and UL Standard IEC/UL 60950-1, "Components"
- Canadian Standards Association Standard C22.2 No. 205-M1983, "Signal Equipment"

Mounting the AQE30E Series Module

The AQE30E mounts using two screws in the mounting tabs. The unit must be mounted in a secure, indoor, dry location to a suitable surface, using suitable hardware.

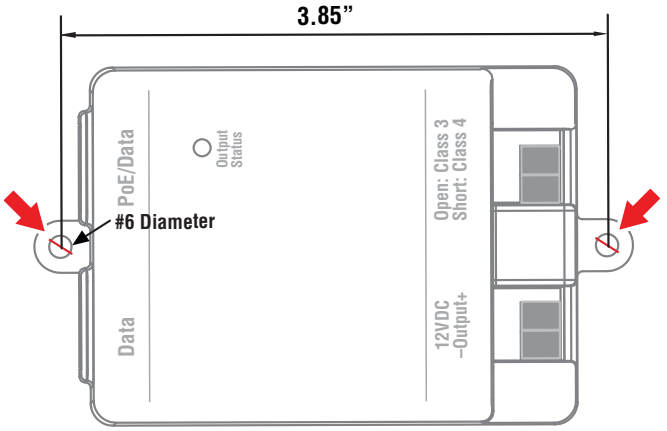

Specifications

	AQE30E
Input Voltage	50V Nominal (42.5 to 57 VDC compatible to IEEE802.3)
Input Current	0.7 Amperes (A) Maximum (Max)
Output Power	25W Max (when power select terminals are shorted) 13W Max (when power select terminals are open)
Output Voltage	12 VDC
Data Rate	10/100/1000 Base-T
ESD Immunity	8 kilovolts (kV)
RJ45 Pinout	Input power connection 1: Pins 1, 2; Pins 3, 6; (any polarity)
	Input power connection 2: Pins 4, 5; Pins 7, 8; (any polarity)
	Data: Pins 1, 2, 3, 4, 5, 6, 7, 8
Operating Ambient Temperature	0 to 49°C, Indoor Dry Locations
Storage Temperature	–20 to +70°C
Operating Humidity	5 to 95% (Non-Condensing)
Size	4.20" L x 2.50" W x 1.20" D (107mm L x 64mm W x 31mm D)
Weight	0.25 lb (0.11 kG)

AQE30E – Module Overview

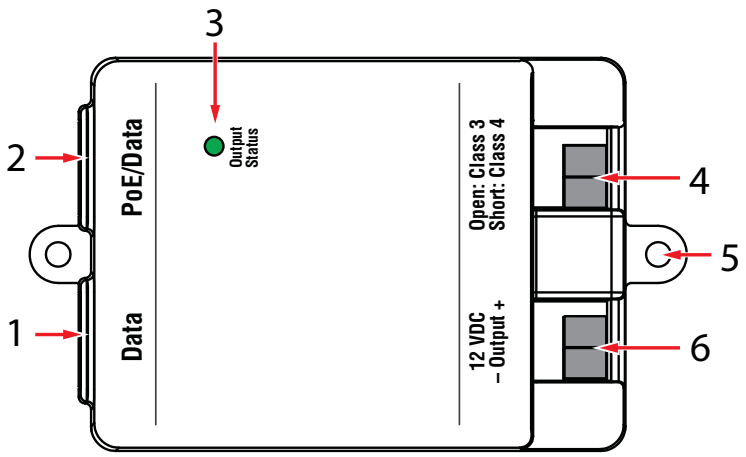

❶ *Data*

This is the non-PoE network connection to a non-PoE camera or other non-PoE device. This connector is an RJ45 jack and accepts a CAT-5 cable.

❷ *PoE/Data*

This is the PoE input from the network. This will come from a PoE source such as a AQE Midspan Injector or a PoE Network Switch. This connector is an RJ45 jack and accepts a CAT-5 cable.

❸ *Output Status (Green)*

This LED shows the status of the AQE30E PoE Extractor See the status chart for more information.

❹ *PoE Class Selection Jumper*

This input selects the class of PoE connected to the PoE/Data input of the AQE30E.

Leave these terminals open if connecting to a Class 3 (15W) PoE Source. Place a jumper across these terminals if connecting to a Class 4 (30W) PoE Source.

❺ *Mounting Tab*

The mounting tab centers are spaced 3.85" on center. Refer to the mounting guide (page 1) for mounting details.

❻ *12VDC Output*

These terminals are the 12VDC output from the AQE30E. This output can be used to power non-PoE devices such as cameras. These terminals can accept wire sizes from AWG16 to AWG22. See the Specifications Section for ratings.

AQE30E – Status LED

AQE30E Port Status	LED State
No Primary Power to Unit	OFF
No Connection on PoE/Data Port	OFF
Operation Normal	ON

Example Wiring - Block Diagrams

a) Powering a non-PoE IP Camera using a 15W PoE Switch and AQE30E Extractor

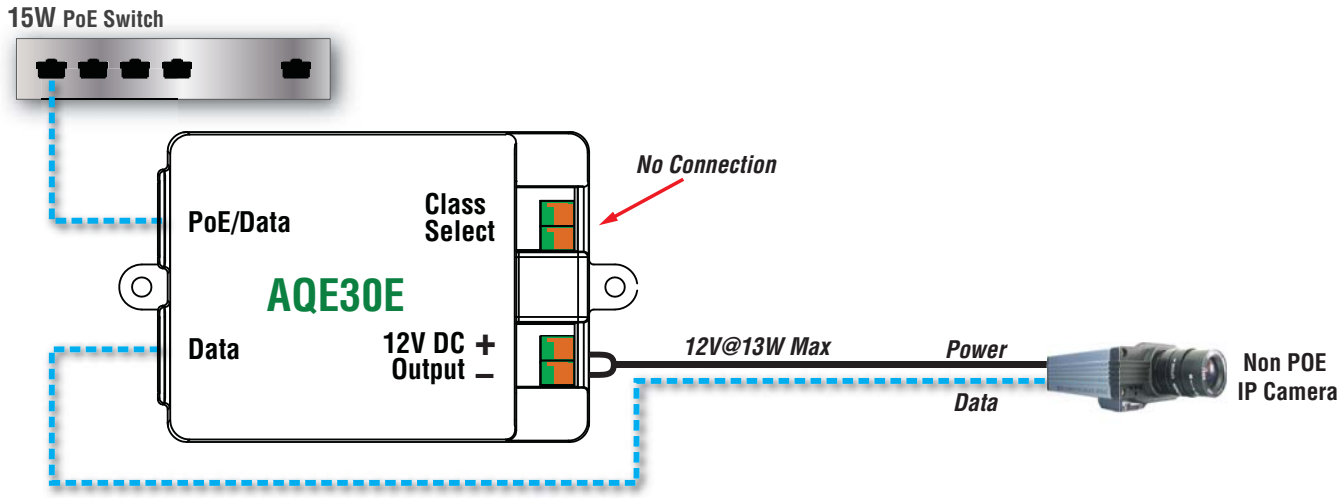

b) Powering a non-PoE IP camera using a 30W PoE Switch and AQE30E Extractor

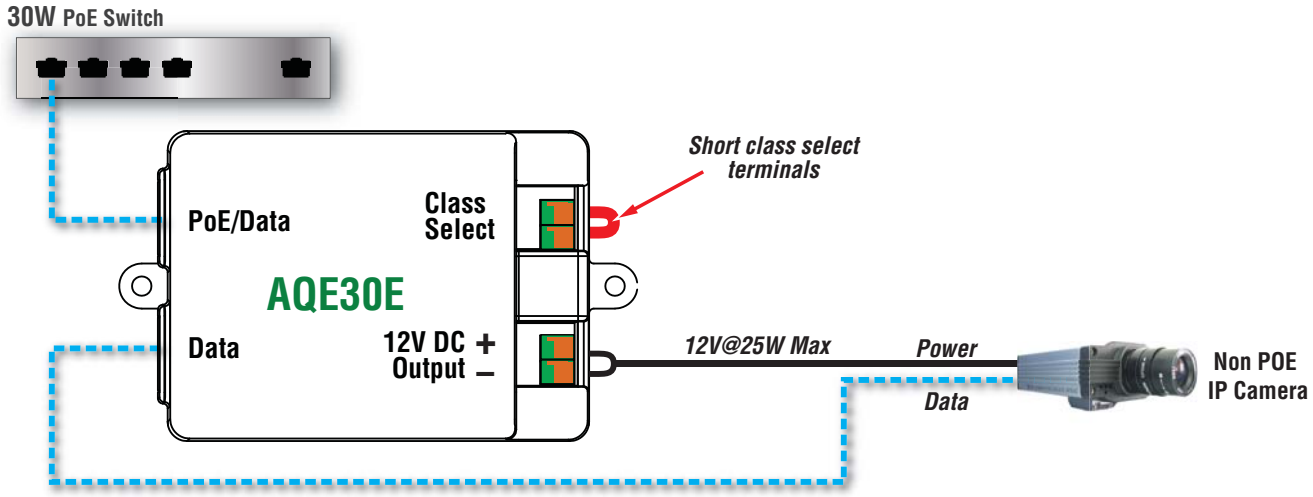

Example Wiring - Block Diagrams

c) Powering a non-PoE Reader using a non-PoE Switch, AQE15 Injector, and AQE30E Extractor

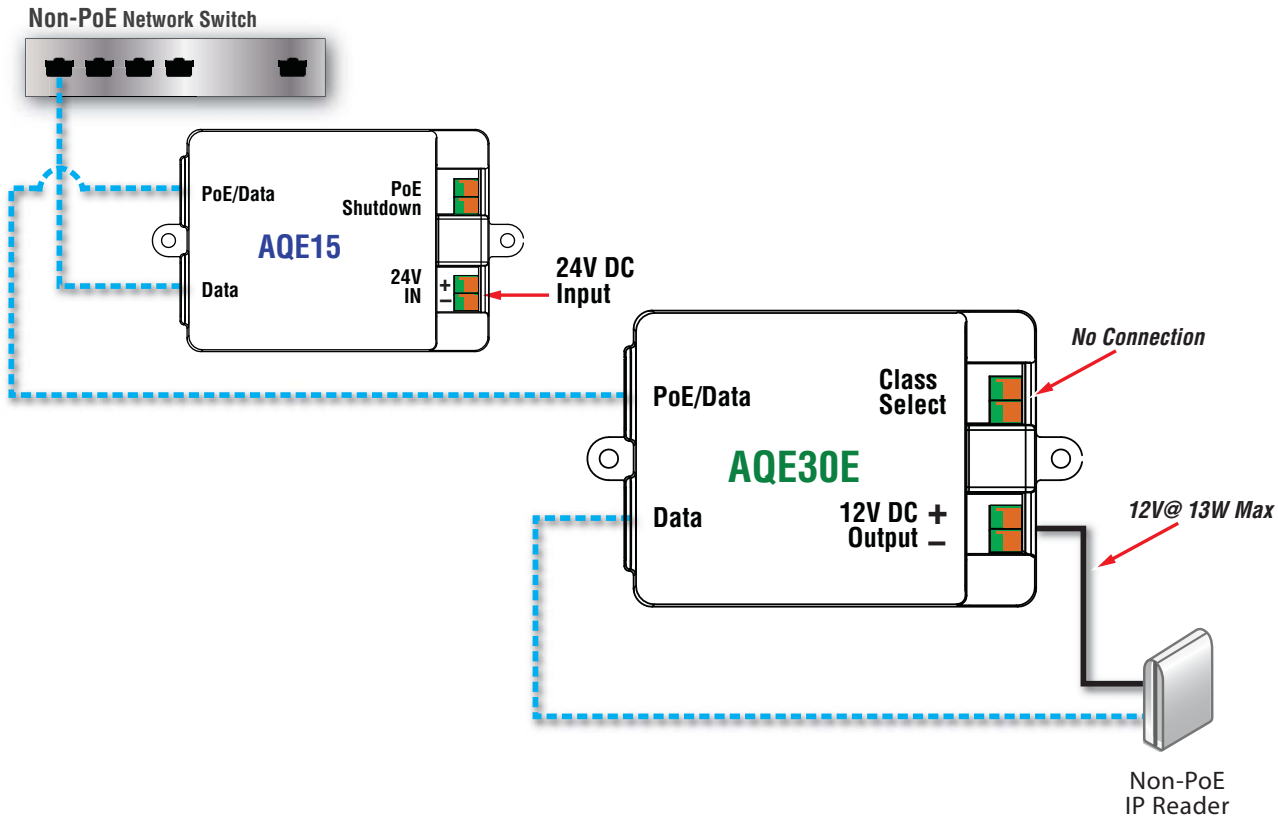

d) Powering a generic non-IP device using a PoE Switch and AQE30E Extractor

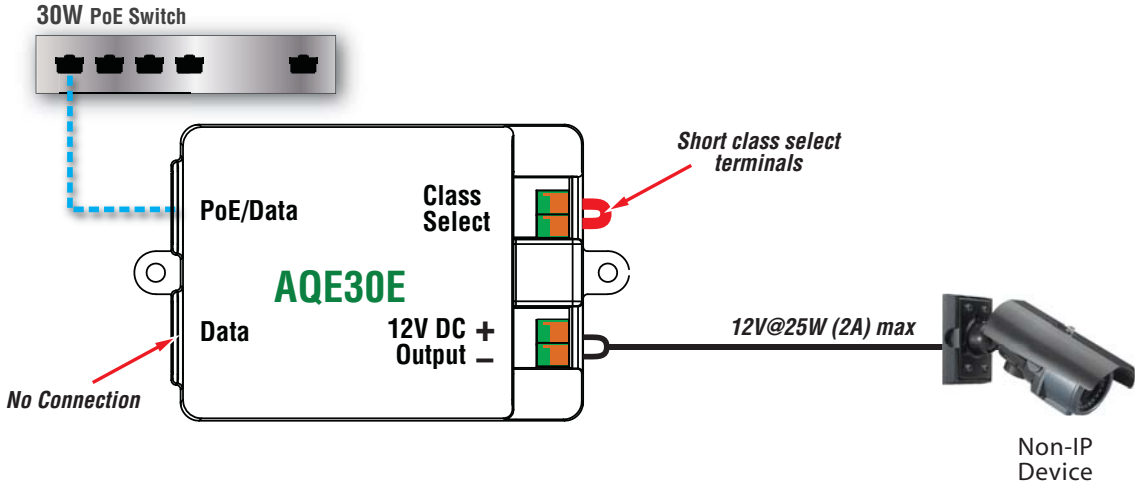

© 2014, Hanchett Entry Systems, Inc., an ASSA ABLOY Group Company.