AQD3 Series 12/24 Power Supply

9.8Vdc-13.7Vdc @ 2.8 Amps max / 20.0Vdc-27.5Vdc @ 1.4 Amps max
Power-limited

Features AQD3 Series:

- **Small – Self Contained – Efficient**
- **Universal AC Input 110-240vac**
- **Extraordinary Brown Out Capability**
- **9.8Vdc-13.7Vdc, 2.8A/20.0Vdc-27.5Vdc, 1.4A Selectable Continuous Duty**
- **Very Clean Output - 10mv ripple rms**
- **Input and Output Surge Protection**
- **Power Limited Output with Thermal Protection**
- **AC and DC LED's**
- **Quality Manufactured in the USA with a lifetime Warranty**
- **Outputs are Power Limited**
- **Provided in Standard Enclosure 14"x8.5"x3.5"**
- **Precise Battery Regulation for all sealed Lead Acid Battery(s)**
- **Battery Online, No Drop or Switch Over with AC Power Fail**
- **Reverse Battery Protection**
- **Comes with plug in battery cable assembly**
- **UL and cUL tested to Standards UL 603 Burglar Alarm Power Supplies, UL 294 Access Control Units, and ULC-S318-96 Canadian Standard for Power Supplies for Burglar Alarm Systems**
- **Relay "C" Contacts Indicates AC Power Status**
- **LTW Limited Warning of stand by battery(s)**
- **Battery Disconnect on depleted Battery(s)**

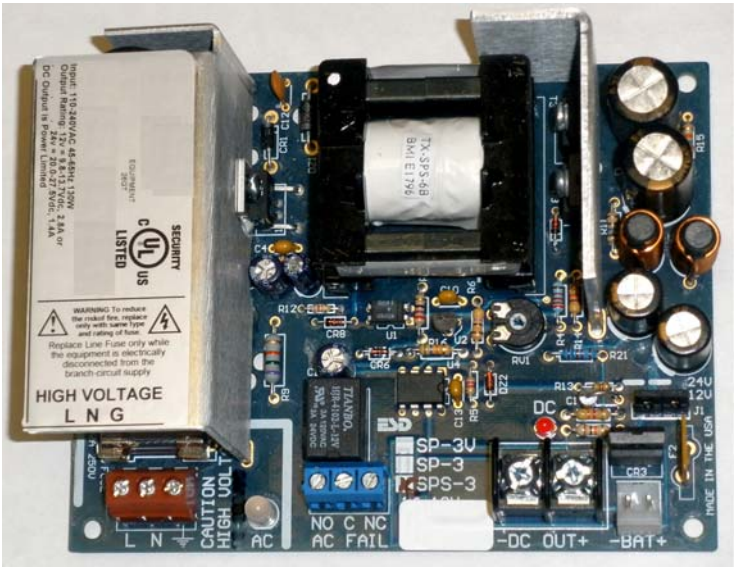

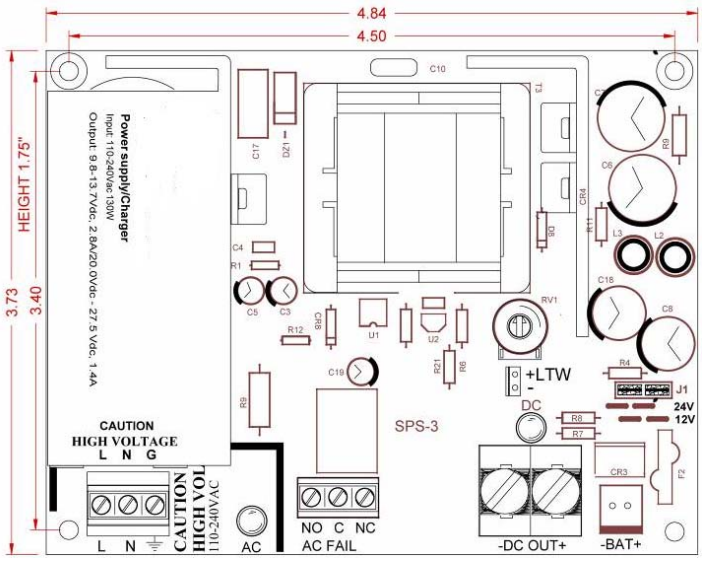

Ordering examples:

AQD3	Supervised Power Supply/Charger module with Standard Enclosure 14"x8.5" x 3.5"
-8F8R	AQD3 with one PDB-8F8R
-4C	AQD3 with one PDB-4C
-8C	AQD3 with one PDB-8C
-4F	AQD3 with one PDB-4F
-8F	AQD3 with one PDB-8F
-1R	AQD3 with one PDB-FT
-8C1R	AQD3 with one PDB-8C1R

SECURITRON
ASSA ABLOY
Securitron Magnalock Corporation
10027 S. 51st St., Ste. 102
Phoenix, AZ 85044

ASSA ABLOY, the global leader in door opening solutions.

Phone: (800) MAGLOCK
customercare@securitron.com
www.Securitron.com

Description

The AQD3 Series Power Supplies are heavy duty self contained, efficient clean off-line switching power supplies that are selectable between 9.8Vdc-13.7Vdc at 2.8 Amps, and 20.0Vdc-27.5Vdc at 1.4 Amps. With the universal AC input, these supplies may be connected anywhere in the world with no plug-in transformer or any alterations. These power supplies have exceptional brown out capability with operation down to 60vac. The extensive filtering system provides a very clean DC output that can power the most sensitive electronic controls and reader where a linear power supply is recommended. All of the supplies are power limited and thermally protected. All output faults are self restoring.

The AQD3 series have a precision lead acid battery(s) charger that obtains maximum battery life while providing a 9.8Vdc-13.7Vdc or 20.0Vdc-27.5Vdc uninterruptible power supply. The AQD3 Series are protected against Battery(s) reversal, shorting or overloading. Before connecting AC and battery(s), set 12v/24v selector jumpers to the desired voltage. **Caution**, damage will occur if jumpers are moved with DC output load or Battery connected. Confirm proper voltage before connecting devices.

The AQD3 has the additional supervisory features of a set of form "C" relay contacts that indicates AC power status and a special electronic circuit that limits the output current to provide power limiting and load disconnect when battery is depleted

Specifications

AC Input: L, N, G - 3P Orange Terminal block

Safety block with recessed hardware insulation that will accept up to 12AWG

L= Line, N= Neutral, and G = Ground

AC Input Rating 110-240vac/47-63Hz 130W
Note: The Ground connection on the AQD3 is connected to the enclosure back with a metal stand off. In the case of enclosures with a removable lid, a ground wire is used to ensure the ground continuity to the lid. If lid is removed, this ground wire must be reconnected securely.

AC LED Indicator *(Next to AC Input Terminal)*

The AC indicator is a green LED, which is illuminated when AC is present.

AC Line Primary Fuse

Fuse: ..... GMA-2 5mm x 20mm 2A 250Vac
Replace this fuse only while the equipment is electrically disconnected from the branch-circuit supply. The proper size 2A fuse must be used.

DC VOLTAGE SELECTOR JUMPER J1

The selector jumper J1 selects the voltage to 12v or 24vdc. As marked on the PCB, jumping 1&2 and 3&4 sets the supply to 12v range. Jumping 2&3 sets the supply to the 24v range. **CAUTION** To prevent damage, remove DC load and battery(s) connections before switching selector J1 jumpers

DC OUTPUT: 2P Terminal block

Output voltage Range 12v/24v
..... 9.8Vdc-13.7Vdc/20.0Vdc-27.5Vdc

Output voltage typical AC ON 13.65/27.30

Output continuous current 12v/24v 2.8A/1.4A

Output ripple & noise @ 80% load ..... 10mv rms Typ

Current Overload Short Circuit Protection ..... Yes

Thermal runaway Protection ..... Yes

Current Overload and Thermal shutdown will auto-restart without removing load.

Power limiting ..... Yes

Ambient operating temp. range -32°F(0°) to 120°F (49°C)

Storage Temperature ..... -60°F to 190°F

Switching Frequency 132KHz

DC LED Indicator *(Adjacent to DC Output)* ..... Red

Battery Connector: ..... (Header plug marked [–Bat+])

AQD3 only - The battery charger is precision set to float charge 12v or 24V sealed or wet lead acid batteries. Two 12v batteries are connected in series for 24V with a provided wire assembly p/n: WA-24SW. A 15" Battery cable assembly p/n: WA-15IBAT is provided that plugs from module battery connector to the battery. Red (+) 12vdc, Black (–) Neg. Each of the 3 wires listed above that connect to the standby Batteries are covered with a special clear tubing that provides additional insulation to ensure proper separation or Power Limited and NON Power Limited wires.

Optional 36" battery cable (1) P/N: WA-36IBAT

Battery(s), any type of lead acid 12v 4AH-18AH
UL evaluated with 18AH on 12v and (2)-9AH on 24v sealed lead acid battery(s). Expected life of batteries is 4-5 years. Some manufacturers are Power-Sonic, Jolt, Yuasa, and Universal.

Battery(s) PTC self resetting Circuit Breaker ..... 3A PTC

Battery(s) Reverse hookup protection ..... Yes

To estimate the recharge time in hours for depleted battery(s), multiply the AH rating times 4 (AH x 4). As an example, a 24v system with two depleted 12v 7AH batteries would take about 28 hours to re-charge.

AQD3 Supervised added features:

DC Output Electronic Power Limited ..... Yes
This feature limits the output current to a maximum peak of 6Amps to comply with UL Power Limiting requirement.

AC Status Output Relay: 3P Terminal block

AC Fail form "C" contacts rating 2A, 24Vdc

Three position AC fail terminal block marked "NO, C, NC" are shown in the Normal, energized, "AC ON" condition.

Using these relay contacts as a switch with a proper DC power source the AC power loss can be locally annunciated as required with Amber or Red Led indicator or sounding device. The contacts my also be used to annunciate, AC failure to a Listed Burglar Alarm or Access Control panel.

Trouble / LTW Limited Time Warning of stand by batteries 95% of Battery has been depleted
Output, 2 position header .1" spacing **(**+&-**) (**-) sinks 3ma
The LTW circuit "MUST" be connected either for local or remote annunciation with an Amber or Red LED to indicate DC Trouble or you may annunciate the LTW by connecting the (-) negative open collector output to an appropriate input of a UL Listed Burglar Alarm or Access control panel. When DC Power is normal, the (-) negative output is an open circuit with the LED OFF. When the DC output voltage drops to a point where the standby battery has been 95% depleted, the LTW (-) turns the LED ON to indicate trouble. The LED remains ON after the Stand by battery has been electrically removed from the DC Output.

The Figure LTW Led below shows the hook up on an LED. The following parts (not provided) will be needed to connect the LED to the LTW Header Output.

1 connector housing .1" spacing with ramp Molex P/N: 22-01-2021

2 Female connecters for housing Molex P/N: 08-50-0113

Wire to connect LED connectors are rated for 22-30AWG

Figure LTW Led

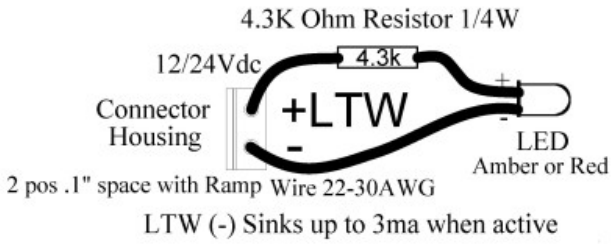

LTW (-) Sinks up to 3ma when active

Low Battery Disconnect (Battery cut-off)
12v/24v 9.8Vdc/Vdc/19.6Vdc

Physical AQD3

For Indoor Use Only

Module Dimensions ..... 4.84"Lx3.73"Wx2.25"H

Height includes required 5/8" #6 FF Hex aluminum standoffs, not provided with module only.

Mounting Holes Center to Center ..... 4.50"W x 3.41"H

AQD3 Dimensions…… ..... 14"W x 9"H x 3.5"

AQD3 Weight 6.7Lbs

Standards

RoHS Compliant Lead Free – Not evaluated by UL

UL 603 Power Supplies for Use with Burglar Alarm Systems.

UL 294 Access Control System Units.

ULC-S318-96 Power Supplies for Use with Burglar Alarm Systems

The units are not to be employed as a power source for Local Audible Alarm Sounding Devices or for Off Premise Alarm Transmitters/Communicators, or Household Burglar Alarm Units.

AQD3 , Power Supply/Charger Installation Guide

The AQD3 with standby battery(s) provide an uninterruptible 9.8Vdc-13.7Vdc or 20.0Vdc-27.5Vdc power source. The Power Distribution modules provide multiple fused outputs, Fire Interface, and Access control Interface. The DC output on the AQD3 power supply is Power Limited. This makes all subsequent outputs power limited.

1. The installation of this power supply shall comply with the National Electrical Code (ANSI/NPFA 70), the Canadian Electrical Code, Part 1, and be in accordance with any additional requirements imposed by the local authority having jurisdiction.
2. For use in Indoor Location Only, Mount the Power Supply in desired location. Utilizing the two keyholes on the upper end and the two or three holes along the bottom, mount the enclosure to the wall with appropriate fasteners.
3. Select output voltage J1 for 12vdc or 24vdc. Only change output voltage when AC is OFF and Batteries are not connected. The AQD3 has a continuous output rating of 9.8Vdc-13.7Vdc at 2.8 Amps or 20.0Vdc-27.5Vdc at 1.4 Amps. If any distribution products are used, the total current draw of these devices must be subtracted from the available current rating. See selection table below or individual data sheets. Connect AC Line voltage, 110-240vac with Earth Ground to the Orange AC input Terminal block. This wiring must be run in separate metal enclosed wiring system only. Note, Ensure all wiring is of appropriate gauge for device being powered. **All Power Limited circuits must be routed a minimum of .25" from Non-power Limited circuits.**
4. Connect DC devices to the Output Terminals. Observe polarity. On the distribution boards Negative is identified with a (-) or (COM). The Positive is identified with (+) or (HOT). Exit the DC wiring out any of the other available knock outs keeping all the low voltage wiring away from the high voltage wiring and battery leads.
5. If AQD3 series connect N/C Tamper switch and AC fail form "C" contacts to Security system for annunciation.
6. Add the current draw of the distribution boards to your load. Always check the spec sheet; but as a rule, each LED draws 6ma and each relay draws 20ma.
7. Confirm with Amp meter that your total continuous current conforms to the output current rating and that each output rating is proper for the powered device(s).
8. On the AQD3 models connect AC fail contacts to annunciate AC Status condition.
9. Connect appropriate standby battery(s). Remove AC and confirm battery output to test standby battery(s). Mark installation date on Battery with permanent marker.
10. Each protected output on the multi-output distribution boards has a Green Status LED. Green ON indicates ready.
11. To reset a tripped PTC Circuit Breaker, you may have to turn power off on outputs, or remove faulted circuit output for up to 2 minutes. This allows the PTC re-settable circuit breaker to cool and reset to its normal "ON" condition.

CAUTION Reduce the risk of fire replace fuses as marked

When calculated your total DC current be sure to add the current of any distributions options you are using. Be sure your normal continuous DC current draw does not exceed the marked rating of the supply.

Select 12/24 J1 only with AC off and Batteries disconnected.

Battery Selection

The table below shows typical standby time in hours for various loads and batteries. The table works for either 12v or 24v batteries. The AQD3 has been evaluated by UL with an 18AH sealed lead acid battery for 12v and (2) - 9AH batteries for 24v to meet the 4 hour stand by requirement.
Note: UL requires a minimum of 4 hours of standby time for Commercial Mercantile Burglar Alarm. The table below has the required battery size highlighted to provide this 4-hr stand by time under a full rated load.

Approximate Battery Standby Time Table with a reserve of 3 Amps for 5 minutes for Alarm

AH = Amp Hours Capacity at a 20 hour rate - Hrs = Hours

Total Output Amps	4AH Battery Standby	7AH Battery Standby	9AH Battery Standby	18AH Battery Standby	24Ah Standby
1A	2.92 Hrs	5.32 Hrs	7.79 Hrs	15.89 Hrs	23.65 Hrs
1.4A	2.09 Hrs	4.75 Hrs	5.56 Hrs	12.61 Hrs	16.89 Hrs
2A	1.46 Hrs	1.3 Hrs	3.46 Hrs	7.94Hrs	10.64 Hrs
2.8A	1.04 Hrs	1.9 Hrs	2.47 Hrs	5.04 Hrs	7.60 Hrs
4A	.73 Hrs	1.33 Hrs	1.70 Hrs	3.53 Hrs	4.73 Hrs
5A	N/A	N/A	.9 Hrs	2.82 Hrs	3.78 Hrs
6A	N/A	N/A	N/A	2.35 Hrs	3.1 Hrs
7A	N/A	N/A	N/A	2 Hrs	2.7 Hrs
8A	N/A	NA	N/A	1.6 Hrs	2.3 Hrs

The Battery recharge time is 2.6 hours for each 1 AH Amp Hour of battery capacity with either 12v or 24v batteries. The minimum battery capacity is 4AH and the practical limit is 24AH UL evaluated with an 18AH battery on the 12v configuration and (2) 9AH batteries on the 24v configuration. Please see the Figures for 12v configurations and 24v configurations below in this document. UL Listed systems require that if standby batteries are to be used they must have a 4 hour capacity under the full rated load. A small E-89 enclosure would require the batteries to be mounted externally as shown in the following figures.

Please see the Figures for 12v configurations page 7 and 24v configurations on page 8.

Maintenance

The power supply and stand by battery(s) should be tested at least once a year as follows:

1. Check LED's for normal state. AC ON Green and DC ON Red.
2. Check output voltage with normal load. With AC ON for 12v setting, DC output voltage should read between 12.83 Vdc-13.69Vdc and 27.1 - 27.4vdc on the 24v setting.
3. Check DC Output Amps to be sure it complies with output rating.
4. Disconnect AC input. AC LED should be off, and the DC LED's should remain normal.
5. Check DC Output to be above 11.5vdc for 12v setting and 23.0vdc for 24v setting. This checks standby batteries to be operational. Sealed lead acid batteries have a typical life of 3 to 5 years. Test battery by itself as outlined in your battery instructions to be sure the Amp hour capacity is within proper range.
6. Re Apply AC and verify AC LED ON.

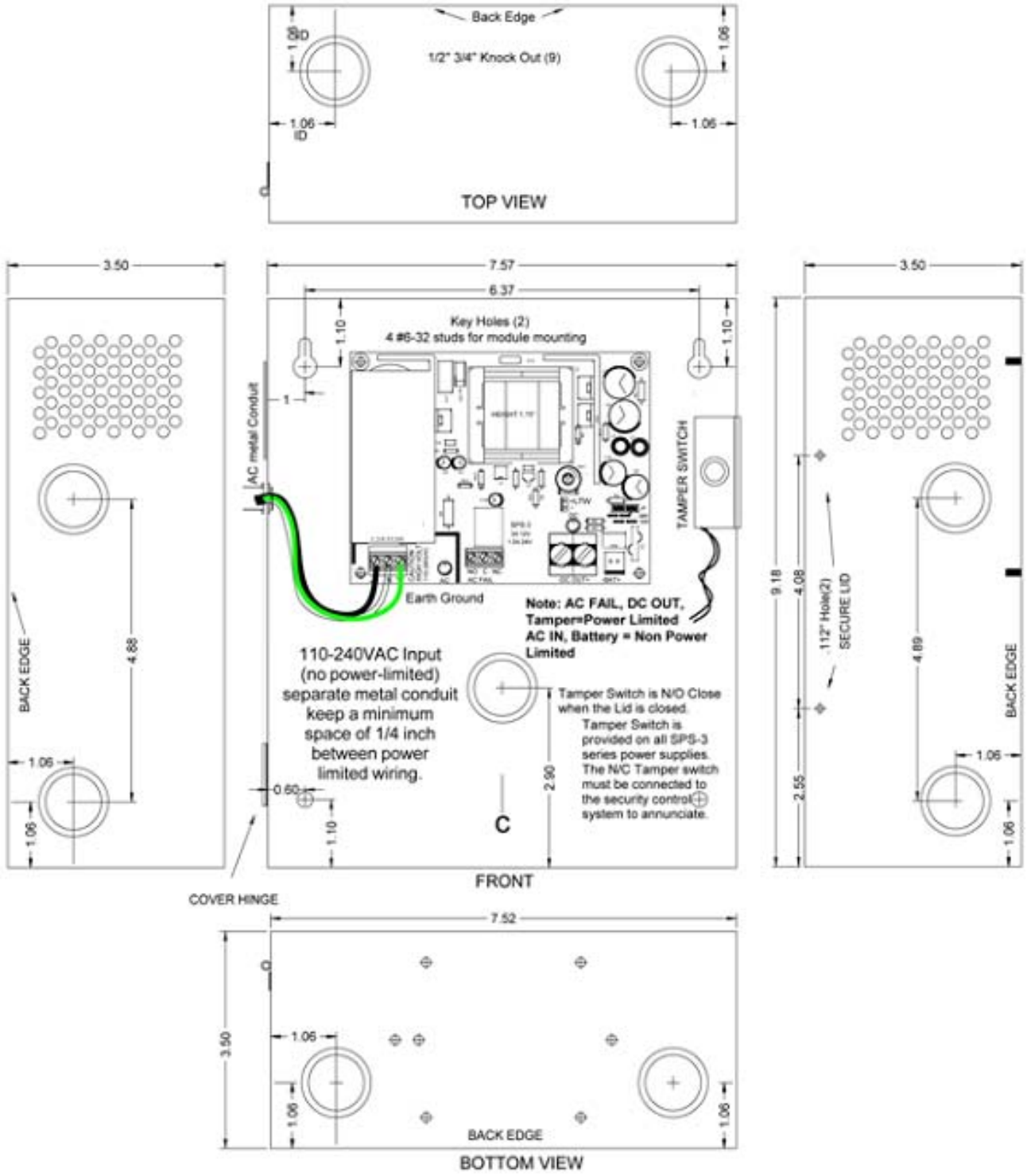
Back Edge
1/2" 3/4" Knock Out (9)
1.06 ID
1.06
TOP VIEW
3.50
7.57
6.37
Key Holes (2)
4 #6-32 studs for module mounting
1.10
1
AC metal Conduit
TAMPER SWITCH
Earth Ground
Note: AC FAIL, DC OUT, Tamper=Power Limited AC IN, Battery = Non Power Limited
110-240VAC Input (no power-limited) separate metal conduit keep a minimum space of 1/4 inch between power limited wiring.
Tamper Switch is N/O Close when the Lid is closed.
Tamper Switch is provided on all SPS-3 series power supplies. The N/C Tamper switch must be connected to the security control system to annunciate.
0.60
2.90
C
BACK EDGE
4.88
FRONT
COVER HINGE
9.18
4.08
.112" Hole(2)
SECURE LID
4.89
2.55
7.52
3.50
BACK EDGE
BOTTOM VIEW

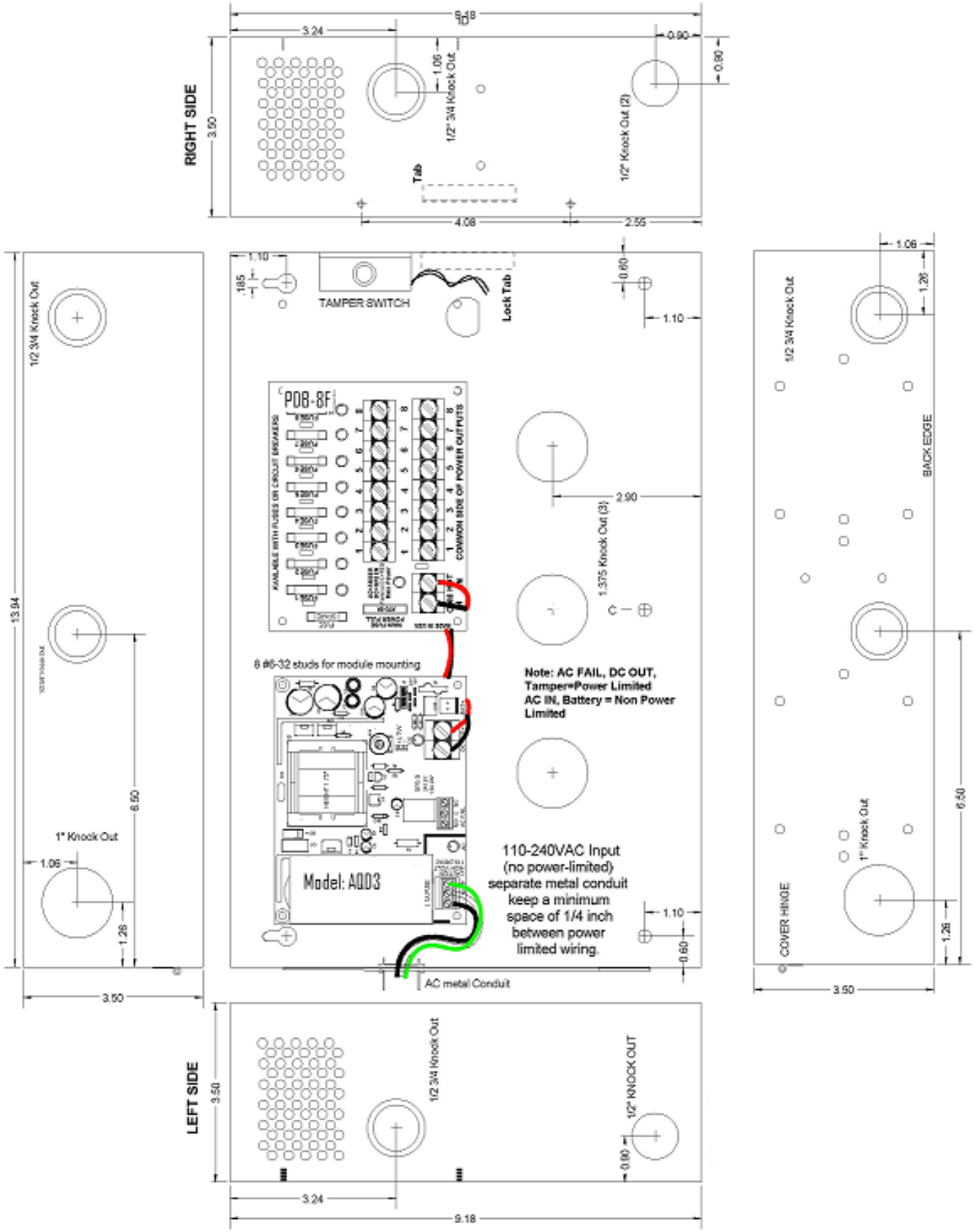
RIGHT SIDE
9.18
3.24
0.90
1.06
1/2" 3/4 Knock Out
1/2" Knock Out (2)
Tab
4.08
2.55
3.50
1/2 3/4 Knock Out
13.94
8.50
1" Knock Out
1.06
1.26
3.50
1.10
.185
TAMPER SWITCH
Lock Tab
0.60
1.10
POB-8F
COMMON SIDE OF POWER OUTPUTS
2.90
1.375 Knock Out (3)
8 #6-32 studs for module mounting
Note: AC FAIL, DC OUT, Tamper=Power Limited
AC IN, Battery = Non Power Limited
Model: AQD3
110-240VAC Input
(no power-limited)
separate metal conduit
keep a minimum
space of 1/4 inch
between power
limited wiring.
AC metal Conduit
1.06
1/2 3/4 Knock Out
1.26
BACK EDGE
1" Knock Out
8.50
COVER HINGE
1.26
3.50
LEFT SIDE
3.50
1/2 3/4 Knock Out
1/2" KNOCK OUT
0.90
3.24
9.18

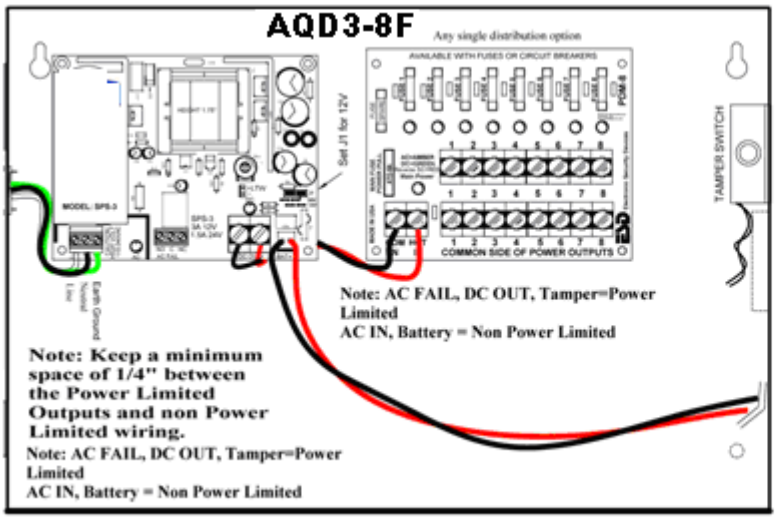

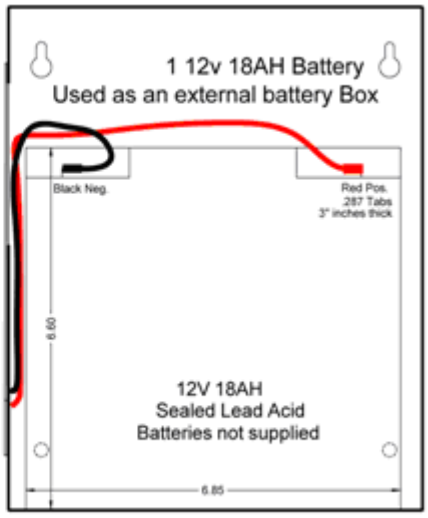

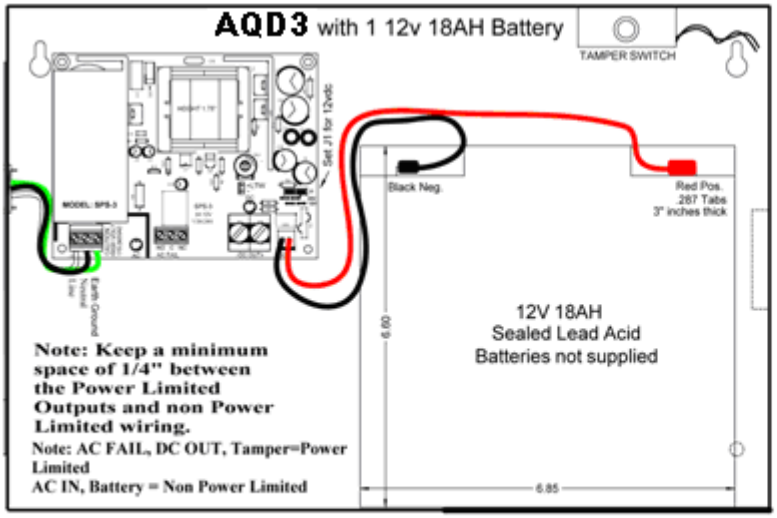

External Battery box is required for 12v stanby when an accessory board is used in the power supply enclosure. Note: External Battery box must be located in the same room mounted adjacent to the power supply enclosure.

The Battery cable supplied is 15 inches long. The following longer cables are available

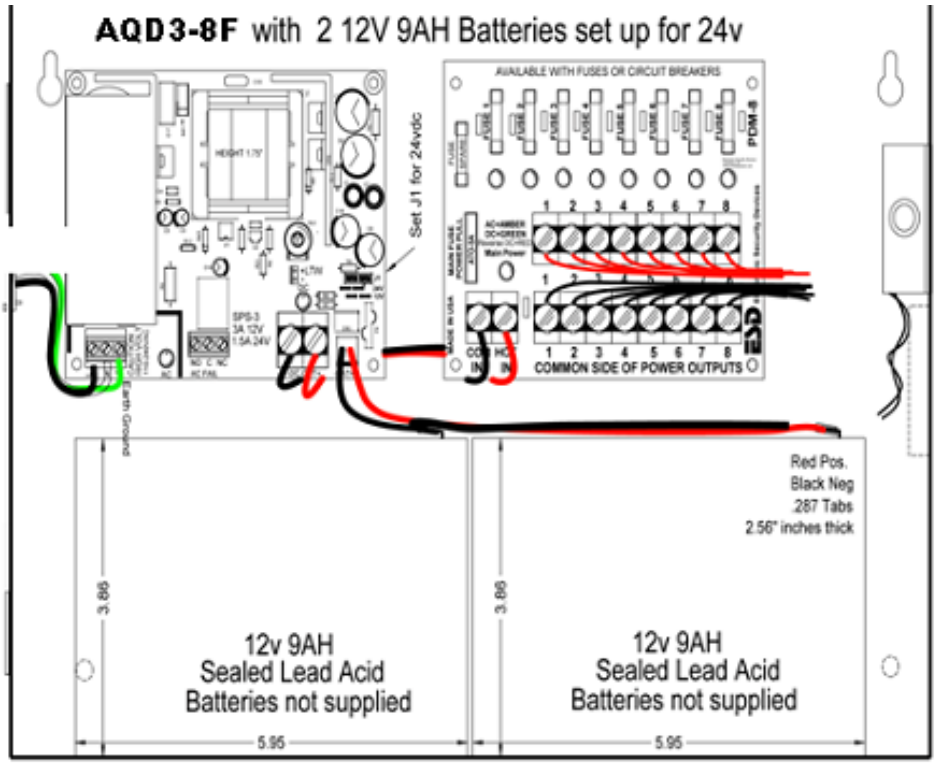

Note: Keep a minimum space of 1/4" between the Power Limited Outputs and non Power Limited wiring.

Note: AC FAIL, DC OUT, Tamper=Power Limited
AC IN, Battery = Non Power Limited

Note: If the Power Limited and NON Power Limited wiring spacing of ¼" cannot be meet the batteries will have to be placed in an external enclosure. If an external battery box is utilized it must be mounted in the same room adjacent to the power supply enclosure.

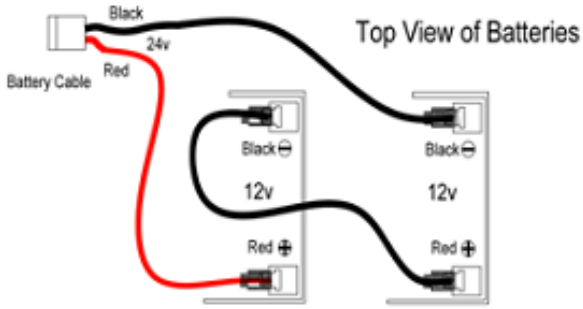

2 12v 9AH batteries connected in series for 24v

The Battery cable supplied is 15 inches long.

Longer cables are available. Contact Securitron Customer Service for Part Numbers.

Figure 24v Battery Configurations

PDB-4F / PDB-8F
Multi Output
Low Voltage Power Distribution Modules
Life Time Warranty



PDB-4F
PDB-4C
PDB-8F
PDB-8C

c UL LISTED

UL 294 – Access Control System Unit
UL 603 – Power Supplies for Use with Burglar-Alarm Systems
ULC S318-96 – Power supplies for Burglar Alarm Systems
ULC S533-02 – Standard for Egress Door Securing and Releasing Devices

Features/Specifications:

- Converts a single AC or DC (12 or 24v) Input to 4 or 8 protected outputs with fuses or circuit breakers
- 1500 Watt surge protection on PDB-8F Input rated 22 Amps @ 32 volts AC or DC
- All PTC circuit breaker ratings are holding current at 130°F per UL Standards
- **Main Power Green/Red LED Indicates AC, DC or Reversed DC Input on PDB-8 and PDB-9**
- Each output has a green status LED indictor
- Current Draw is 6ma max per LED
- Main Fuse / Power Pull is standard ATO Automotive size on PDB-8
- ON / OFF Power Switch on PDB-4F
- Circuit Breaker Models with Rated Output 1.42 Amps or below are Power Limited
- PDB-8F & PDB-8C are c UL us LISTED As configured in UL listed products.
- PDB-4F, PDB-4C, PDF-8F, & PDB-8C are UL listed Sub Assemblies As configured in UL listed products suitable for Access Control and Burglar alarm systems
- All Input Terminal blocks and output terminal blocks on the PDB-8F module are rated 40A with a wire range of 10 – 18AWG
- Output Terminal blocks on the PDB-4F are rated 10A with wire range 16-30AWG
- Size: PDB 4F 3.75”H x 2.22”W x 1”D Mounting: 3.41”H x 1.87”W
  Size: PDB-8F 3.87”H x 4.84”W x 1”D Mounting: 3.41”H x 4.49”W
  Quality Manufactured in the USA

RoHS COMPLIANT

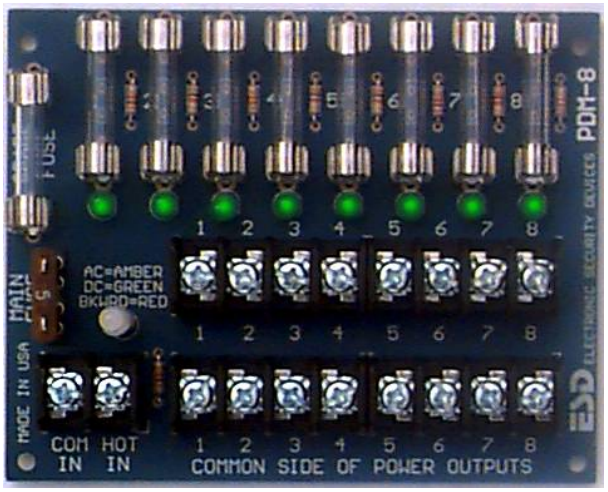

Custom Order details NOT UL LISTED

PDB-4F-FFF	4 Fused Outputs with power switch and status LED’s.
PDB-4C-CCC	4 PTC Circuit Breaker Outputs with power switch and status LED’s
PDB-8F-MMM-FFF	8 Fused Outputs with ATO Main/power pull fuse, status LED’s and 1500 watt surge protector.
PDB-8C-MMM-CCC	8 PTC Circuit Breaker Outputs with ATO Main/power pull fuse, status LED’s and 1500 watt surge protector.
PDB-9F-MMM-FFF	9 Fused Outputs with ATO Main/power pull fuse and status LED’s.
PDB-9C-MMM-CCC	9 PTC Circuit Breaker Outputs with ATO Main/power pull fuse and status LED’s
FFF Fuse Options	FFF = Fuse Rating in Amps (x.xx) standard 3agc Size: (050 = 500ma); (100 = 1A); (200 = 2A); (300 = 3A); (400 = 4A); (500 = 5A)
CCC Circuit Breaker options	CCC = PTC part number equaling the holding current in Amps at UL rating 50C: (090 = .7A); (135 = 1.04A); (160 = 1.23A); (185 = 1.42A); (250 = 1.93A); (400 = 3.08A); (500 = 3.85A); (600 = 4.62A)
MMM Main Fuse options	MMM = Main Fuse Rating in Amps (xx.x) – Standard Automotive ATO Size: (050 = 5A); (075 = 7.5A); (100 = 10A); (150 = 15A); (200 = 20A); (250 = 25A)

PDB-9F
PDB-9C
Below
NOT EVALUATED
BY UL

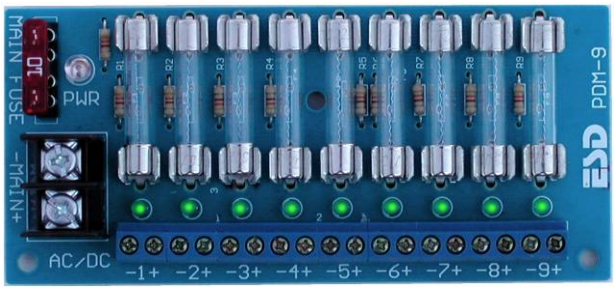

PDB-FT Fire Transfer Relay with EOL

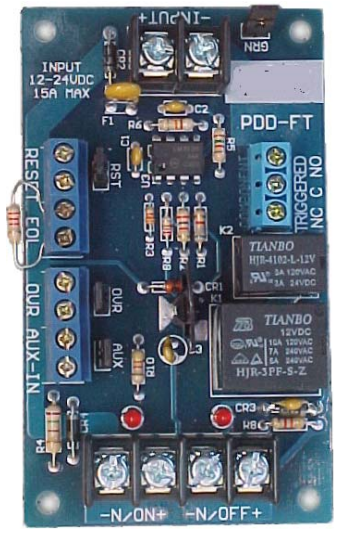

Trigger

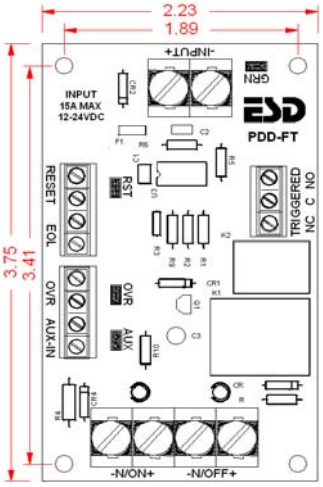

Features:

- **Non Latching or Latching mode**
- **12 or 24VDC Operation**
- **Reverse polarity protected**
- **Normally ON & Normally OFF Output**
- **Output LED's indicate condition**
- **Outputs can be Triggered with:**
  1. **N/O or N/C Switch with Supervised (EOL)**
  2. **N/C Switch with (OVR) over ride**
  3. **N/C Switch with AUX-IN auxiliary**
  4. **Ground on any trigger input when (GRN Jumper is enabled**
- **Form C Contacts Indicates Trigger Status**
- **12 Amp Transfer Relay Contacts**
- **Lifetime Warranty - Made in the USA**
- **UL Listed Sub Assembly for Access Control and Burglar Alarm Systems**

Description

The PDB-FT transfers the input power from the normally ON output pair "-N/ON+" too the normally OFF output pair "-N/OFF+" when triggered. The unit is triggered when the supervised (EOL), end of line resistor is opened or shorted. The triggered form C user contacts indicate the state of the trigger. A typical application of the PDB-FT is to place a distribution board on one or both of the outputs, one of our power supplies on the Input, then connecting the EOL at a fire alarm panel to transfer the power from one distribution board to another when the Fire alarm panel is in the alarm condition. The transferred power would be used to unlock doors, shut down air systems, or return elevators to an exit floor.

Specifications / Instructions

Input Power "-INPUT+": 2 Pos. Terminal block with self clamping screws will accept multiple 12awg wires – Operates with 12 or 24vdc input. The input current is 70ma to control relays plus whatever output load is. The positive side of the power is connected to the swing arm of the transfer relay which directs the power to the proper output.

Output Power: 4 Pos. Terminal block Self clamping screws will accept multiple 12awg wires. "-N/ON+" are normally ON output power. This output is ON when the PDB-FT is not triggered. "-N/OFF+" is normally OFF. This output is ON when this unit is triggered. The transfer relay is rated at 15A@12v and 12A@24vdc.

Power LED's: A red led above each output indicates which output is ON.

Input Trigger EOL: 2 Pos. Terminal block – Will accept 14-28awg wire. This input must see the 2.2K ohm end of line resistor to be in the normal set condition. A change in resistance of + or – 60% will cause the trigger relays to drop out in the Triggered mode. This change in resistance is caused by the supervised wire between the EOL at the Fire panel and the PDB-FT being shorted or opened. The EOL supervises the pair of wires. **Input Trigger OVR: 2 Pos. Terminal block** - Will accept 14-28awg wire. This pair is normally closed, can be connected to an override switch. When OVR is open, unit will trigger.

Input Trigger AUX-IN: 2 Pos. Terminal block - Will accept 14-28awg wire. This pair is normally closed and can be connected to an auxiliary device. When AUX-IN is open, unit will trigger.

RESET 2 Pos. Terminal block – Will accept 14-28awg wire. When this pair is shorted, input triggers do not latch. If pair is open, the input triggers will latch until alarm is corrected and RESET is momentary closed to reset trigger.

Jumpers RST – OVR – AUX are jumpers with handles to short adjacent terminal blocks that are not used. You may move the jumper to one header to open short to enable adjacent terminals.

Jumper GRN – This jumper is used to enable ground supervision in the inputs. If the jumper is connected to both headers, and the mounting hole adjacent to jumper is connected to ground with a star washer, a ground on any of the input triggers will cause a trigger.

Trigger Status Terminal block - Will accept 14-28awg wire. Form C Contact with a 3 Amp rating will indicate the condition of trigger. C and NO are normally open in the normal energize not triggered state. C and NC are normally closed in the normal energized not triggered state. These contacts may be used to provide feedback to the FACP or other annunciating devices.

The PDB-FTis available as a module or mounted in an enclosure with any of our DC Power Supplies.

Module dimensions ..... 2.23"W x 3.75"L x .8"H
Mounting holes dimensions ..... 1.89" x 3.41"
Weight: 2.2oz

UL Approvals for PDD-FT

UL 294 – Access Control System Unit
UL 603 – Power supplies for Use with Burglar-Alarm Systems
ULC S318-96 – Power supplies for Burglar Alarm Systems
ULC S533-02 – Standard for Egress Door Securing and Releasing Devices

PDB-8C1R DC Power Distribution with Supervised Interface module

Distributed Power Control Interface for Fire, Access, HVAC, Elevator, and Security

Features:

- **8 Power Limited Outputs with Auto-Resetting Circuit Breakers**
- **Each Output is Individually Selectable to Turn On, Turn Off, or always ON when Triggered**
- **Outputs can be triggered with:**
  1. **Voltage or Reverse polarity (opto isolated)**
  2. **N/O or N/C switch with supervised EOL**
- **Form C Contacts (TRIGGERED) and Red LED (TRG) Indicate Trigger Status**
- **Form C Contacts (TROUBLE) and Green LED (TRB) Indicate:**
  1. **One of the output circuit breakers is tripped**
  2. **Main Fuse Blown or no power on input**
- **Operates with 12.6 or 25.2VDC**
- **Each Output pair has a Removable Terminal Block**
- **Each Output has a Green Status LED**
- **Main Power has Green Status LED**
- **Main Power Pull and Fuse**
- **Lifetime Warranty**
- **UL Listed Sub Assembly for Access Control and Burglar Alarm Systems**

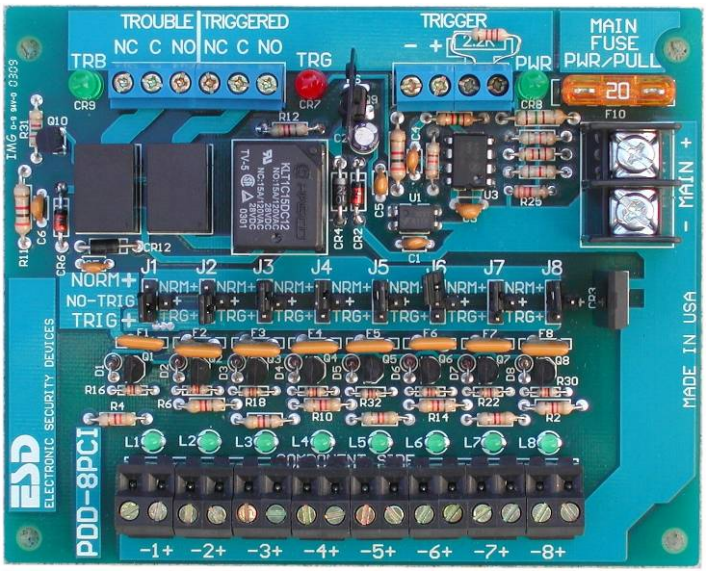

Description

The PDB-8C1R power distribution control interface converts a main non-power limited DC power source to 8 power-limited outputs that can be controlled by a (FACP) Fire Alarm Control Panel. Each output can be selectively set (J1-J8) to turn ON or to Turn OFF when triggered by the panel. The FACP or other control system can interface to the PDB-8C1R with either of two or both supervised trigger inputs. One trigger is activated with a reverse polarity voltage from a FACP. This trigger is fully isolated with an optical isolator. The other trigger is an (EOL) 2.2K End Line Resister input which will accept a (N/O) Normally Open switch or a (N/C) Normally Closed switch.

When triggered, the Trigger Transfer Relay removes power from the NORM + buss and transfers it to the TRIG + buss. Jumpers J1-J8 determines which buss each output is connected to. The triggered form C contacts also drop off normal when triggered and the Red (TRG) LED turns on. These contacts can be used to daisy chain other PDB-8C1R, latch, or provide feedback to a system.

The Trouble Form C Relay drops off Normal if any one of the PTC circuit breakers is tripped, or main power/fuse is lost. The Green (TRB) LED is ON during normal operation, it goes off with trouble. All three relays are Fail-Safe, energized in the normal condition.

Each output has a Green LED that is on when the associated output is ON.

Typical applications for a Fire Alarm System would include adding remote Bells and anunciators, closing dampers, turning off HVAC fans, unlocking fail secure and fail safe doors, and or returning elevators to first floor. The installation instructions illustrate these applications.

The PDB-8C1R is available as a module or mounted in an enclosure with any of our DC Power Supplies.

Specifications	**UL Approvals**
Input Voltage ..... 10.5 to 12.4vdc or 22.7 to 25.2vdc Output Voltage ..... virtually the same as Input Current, Typical, with No Output Load ..... 90-160mA Outputs 1–8 continuous duty each ..... 1.23 Amps Voltage Trigger ..... 20% < Input min. 30vdc max. Voltage Trigger isolation ..... Optical EOL (End of Line) Trigger ..... Trip +-50% of 2.2K Ω Transfer Relay Contacts ..... 15Amps Trouble Form C Contacts ..... 2A 120vac/1A 220vac Triggered Form C Contacts 2A 120vac/1A 220vac	UL 294 – Access Control System Unit UL 603 – Power supplies for Use with Burglar-Alarm Systems ULC S318-96 – Power supplies for Burglar Alarm Systems ULC S533-02 – Standard for Egress Door Securing and Releasing Devices

PDB-8F8R Power Distribution for Access Control with Fire Interface module

Controls and Distributes Power with 8 Control Relays with an EOL Fire trigger Interface

Power Interface for Access Control, CCTV, Fire, HVAC, Elevator, and general low voltage system control

Note: Fire, HVAC and Elevator Control has not been evaluated by UL

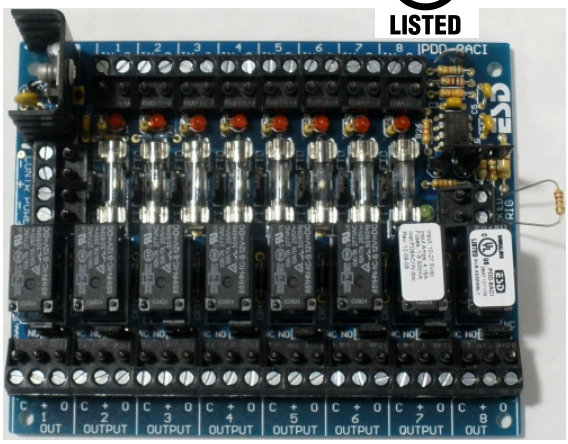

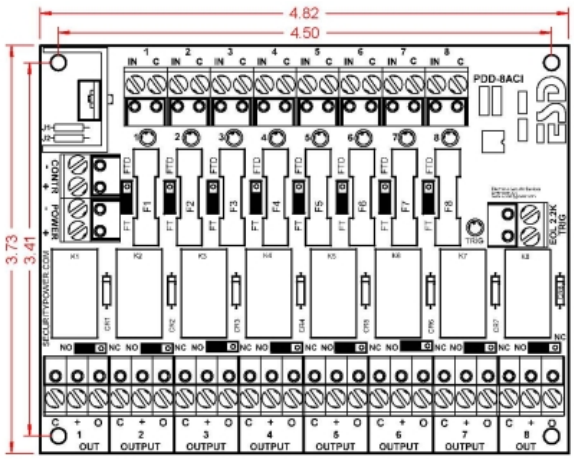

- **Features:**
- **8 Heavy duty Relays with individual Inputs and Status LED's**
- **Each Relay Input can be Activated from Low Current Open Collector, Normally Closed or Normally Open Switch**
- **EOL End of Line Resistor Fire Interface Master Trigger de-energizes all Output Relays that are Enabled**
- **Universal 11 – 27.5Vdc power input**
- **Available with Fuses or PTC Circuit Breakers**
  Note: Only the 500mA fuse version of the board has been evaluated by UL
  Note: The outputs of the PDB-8F8Rare power limited when connected to the AQD3 power-Limited power supply
- **Each Output may be Individually Configured for:**
  - **Fire Trigger (FT) Enabled or (FTD) Disabled**
  - **FUSE model can provide optional Dry Contacts**
  - **N/O or N/C Option Configures the Relay Switched Output**
- **Each Output 1-8 has a protected, continuous Output and a Relay controlled Output**
- **TRG LED Green Indicates Trigger Status**
- **Control Power and Main Lock Power may be Isolated (Separate Power Supplies) at Users Option**
  Note: Dual/separate power source configuration has not been evaluated by UL and cannot be configured for UL Listed products
- **All Terminal Blocks are Pluggable by Channel & Function**
- **Made in the USA with a Lifetime Warranty**

Description / Instructions

The PDB-8F8Ris a versatile, compact way to distribute and control power for Access Control Systems with Fire Alarm Interface. The PDB-8F8Ris an 8 position power distribution board with individual Relays with input (IN) control for each output (OUT). An EOL resistor trigger input (TRIG), will force all output relays to de-energize that are selected (FT). In a typical installation, the TRIG would be connected to a Fire Alarm panel via a set of contacts. When the Fire Alarm trips, all enabled relays would be forced to be de-energized to unlock electric doors, shut down air systems, and or return elevators to ground floor.

Input / Output Terminals, Jumpers and LED Details and Specifications

Control Power (- CONTR +) Two position un-pluggable terminal block is used to power the coils of the relays. The control voltage must be between 11 and 27.5 Vdc. Each relay energized will draw 20ma of current. By default, Control Power and Main Power are connected together with jumpers J1 & J2 so no connection would be made here unless you were using Dual/separate power as described below. Note Dual/separate power source configuration has not been evaluated by UL and cannot be configured for UL Listed products.

Main Power (- POWER +) Two position un-pluggable terminal block provides the power to the outputs to be distributed and power to Control through J1 & J2. In a normal application the Power must be between 11 and 27.5 Vdc and would be connected here.

Dual/Separate Power J1 & J2 Jumpers Note Dual/separate power source configuration has not been evaluated by UL and cannot be configured for UL Listed

products. J1 Connects (-) Power to (-) Control, J2 Connects (+) Power to (+) Control. By default J1 & J2 are connected together. When J1 & J2 are cut, you must supply 11 to 27.5Vdc to Control power, then you may connect any voltage to 32V AC or DC to the Main Power Terminals. See Dual/Separate Power application figure below.

Inputs (1-8 IN C) Eight, two position un-pluggable terminal blocks. When IN & C are shorted together, the like number output relay will energize. Each relay can also be energized by an open collector that is common to the control power, sinking 20ma for each input. Each of the C's (common) are connected to control negative power.

Input LED's (1-8) Whenever an input is active (relay energized) the associated input red LED will illuminate.

FDT/FT (1-8) Jumpers - These are three pin headers adjacent to each fuse with a shunt with handle that shorts the center pin to FTD or FT.

FTD = Fire Trigger Disabled - When selected, the Trigger will not effect that output.

FT = Fire Trigger – When selected Triggering will force that Input Relay to De-Energize.

Dry/Wet Option (1-8 Fuse Models) Through a Fuse, the (+ Power) is connected to the swing arm of each Relay to distribute power to its output. Removing the Fuse, removes the power from the relay. The (+) now becomes the Common Swing Arm and the "O" is the N/O or N/C contact as selected with jumper.

Outputs (1-8 OUTPUT C, +, O) Eight, Three position un-pluggable terminal blocks. "C" is Power Common and is connected to (- power). "+" is connected to fused (+power) and the relay swing arm. "O" is the relay switched output as selected with N/O or N/C selector jumper

Output Relay Contacts Selector (1-8 NC/NO) Jumpers These 3 pin headers with shunt selectors are located just above each output which selects whether the N/C or N/O contacts are connected to the "O" switched output terminal. With N/C selected, output would be normally ON, or connected to swing arm. With N/O selected, output would turn ON, or close when input is activated. **Fire Alarm Interface Trigger (2.2K EOL TRIG)** Two position un-pluggable terminal block. This input must see the 2.2K ohm EOL (End Of Line) resistor to be in the normal condition. The EOL is to be placed in a Listed fire alarm panel. See Fig 1 illustrating that shorting or opening the EOL will cause the PDB-8F8R to trigger.

TRIG LED (TRIG) Green LED normally ON. Whenever the Trigger is active the LED will be OFF.

Ordering Information

PDB-8F8R "ACI" module only with 500ma Fuses Note: Only the 500ma fuse version of the board has been evaluated by UL No other fuse size or PTC's can be used with a AQD3 .

Specifications

Control (-contr+) ..... 11–27.5Vdc @ 160mA

Normally no connection is made here. Note: You must add this current to your total device load calculations to be sure your load will be within the rating of the power supply as configured

Main Power (-power+) 11-27.5Vdc

Note: Must cut J1 & J2 when not using 11-27Vdc power See Dual/Separate power source configuration Note Dual/separate power source configuration has not been evaluated by UL and cannot be configured for UL Listed products.

Total Amps would be equal to the total current of the outputs load plus the module draw of 160ma

Fused/Wet Outputs (12v operation):
Max. Output Current..... 330mA,12V (each output)
2.64 A (total all outputs)

Fused/Wet Outputs (24V (each output):
Max. Output Current ..... 155mA, 24V (each output):
1.24 A (total all outputs)

Dry Outputs:
Max. Output Current 3A, 30V

As evaluated with UL with 500ma fuses

Terminal blocks un-pluggable ... 5mm spacing 14–22 awg

Fused Outputs 1-8 ..... 500mA

Littlefuse P/N 217.500 20mm replacement

The fused outputs of the PDB-8F8Rare power limited when connected to the AQD3 power-Limited power supply

Output Relays 1-8 Dry Contacts are not to exceed ..... 7A or 100VA

Trigger Input ..... 2.2K EOL

Operating Temperature ..... 0° to +49°C

Mounting Holes ..... (4) 3.4" x 4.5"

Module Size: ..... 4.82"w x 3.84h x 1.4"d

Weight: 8oz

Mounting Note: Secure 4, #6-32 female/female hex standoffs 7/16" long onto 4, #6-32 studs provided in distribution option space to the right of AQD3 inside E-1485 cabinet back. Place PDB-8F8Ron stand offs with input terminals on top. Secure module with 4, #6-32 x ¼" pan head screws. No metal hardware should be larger than .28" in Diameter.

Note: All interconnected devices must be UL Listed.

UL Approvals for PDB-8F8R
UL 294 Access Control System Unit

PDB-8F8R Typical Applications

Single Power Source Application Fig 1

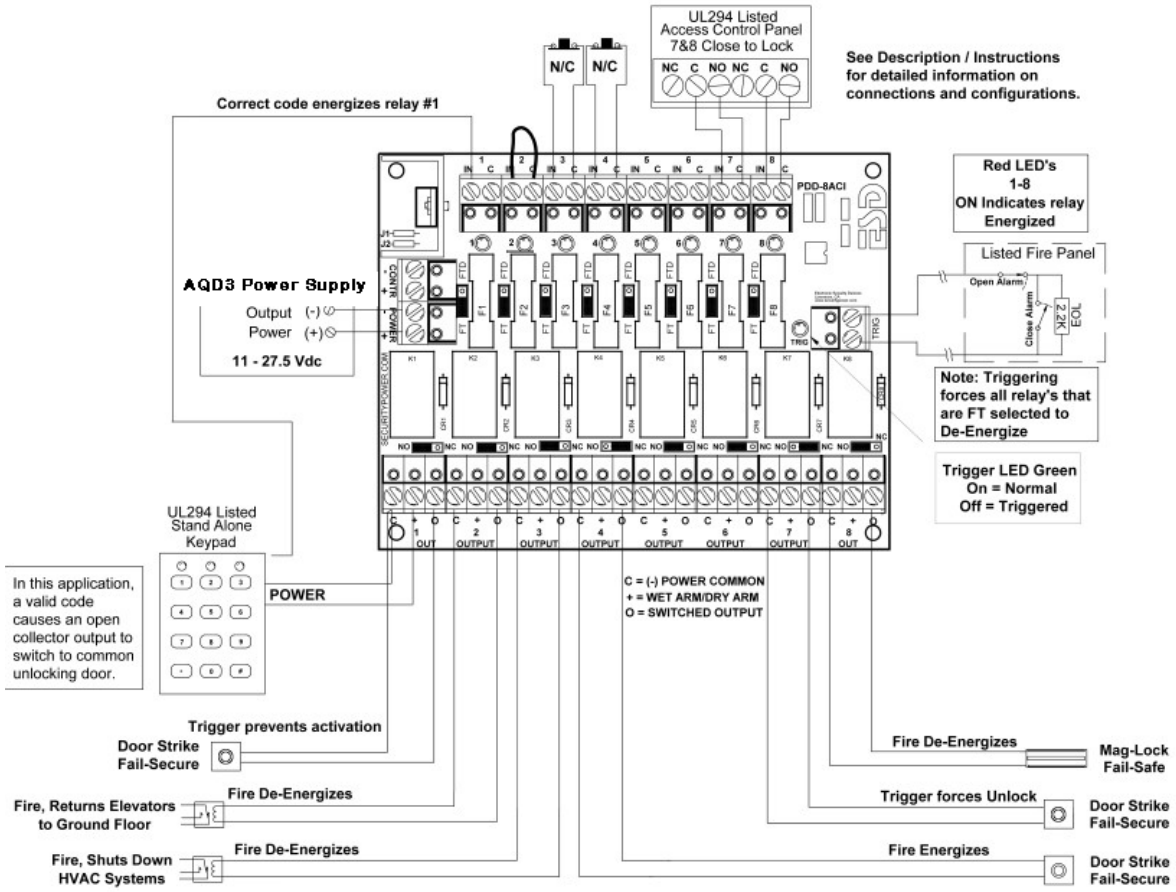

Single Power Source Application Fig 1

Dual/Separate

Power Supplies Fig 3

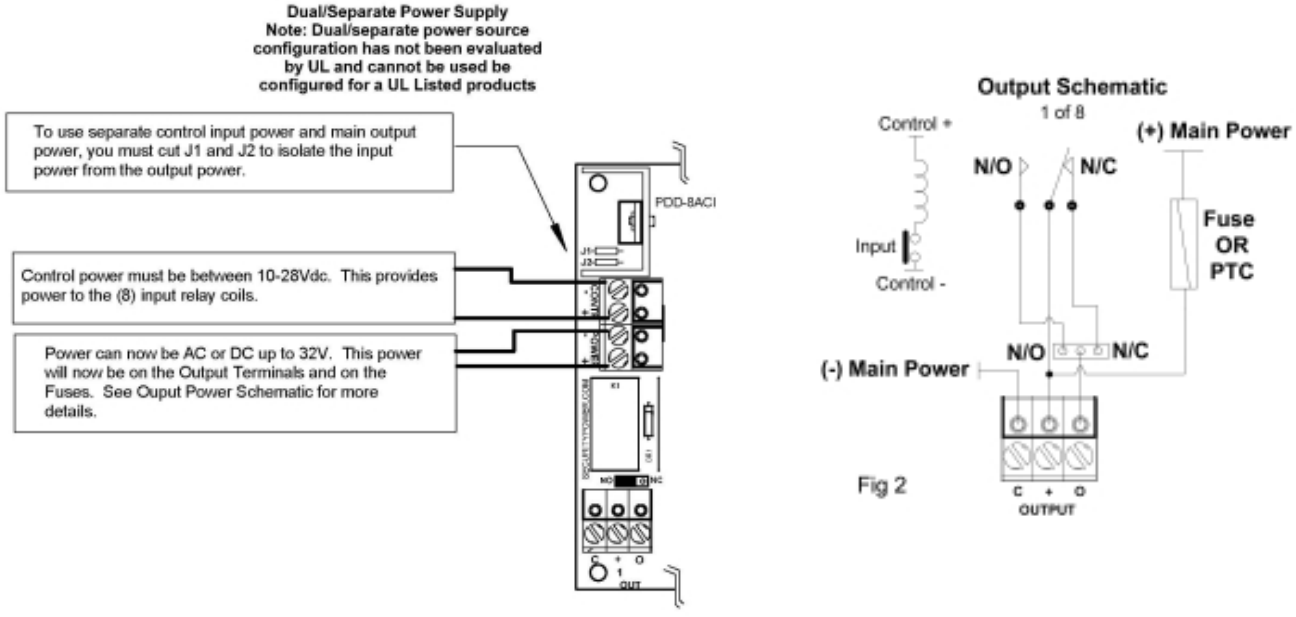

Fig 2