ALLEGION

VON DUPRIN

98/9927 Surface Vertical Rod Series Exit Devices

Service manual

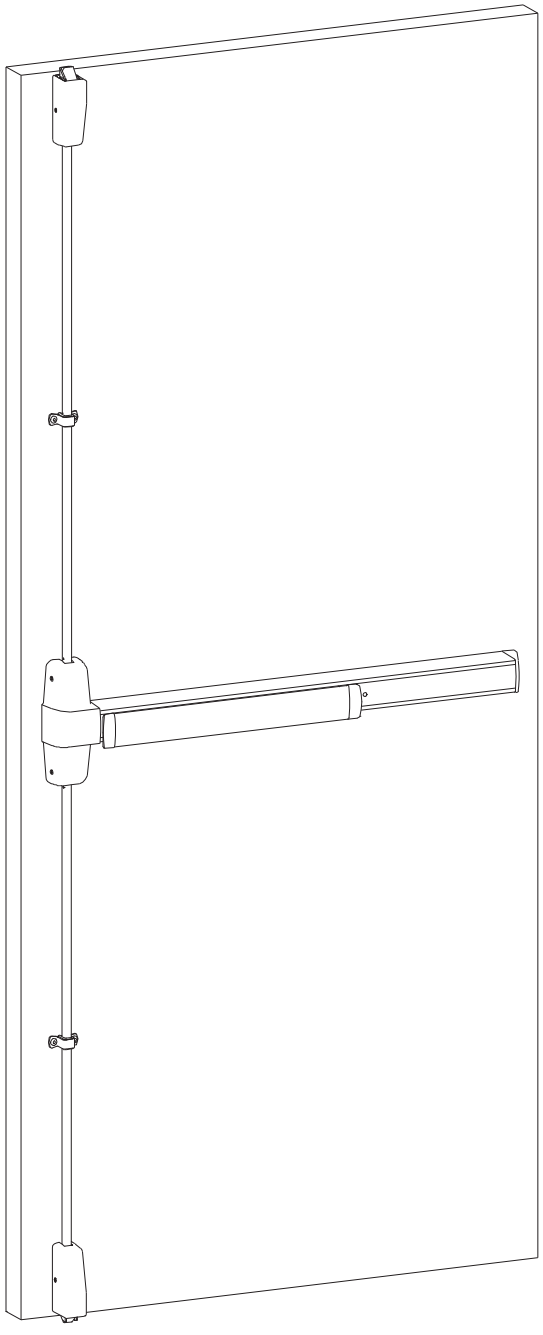

INDEX

98/9927 Devices
- Basic Panic Device 4-5
- Basic Fire Device 6-7
- Vertical Rods and Latches 8-9
- Baseplate Assemblies 10
- Center Case Assembly 11
- LBR (Less Bottom Rod) Fire Latch Kit 11

Variations of the Basic Device
- CD (Cylinder Dogging) 4-5
- HD-EL (Hex Dogging/Electric Latch Retraction) 12
- EL (Electric Latch Retraction) 13
- SS (Signal Switch) 13
- RX (Request to Exit) 14-15
- LX (Latch Bolt Monitoring) 14-15
- CX (Chexit Discontinued) 16
- CX (Chexit New) 17
- CX (Chexit New RCM/DE5300 Option) 18
- CX-CD/SD (Chexit/Special Dogging) 19
- ALK (Exit Alarm Kit) 20

Service Replacement Items 21-22

General Information
- Introduction 2
- How to Order 2
- Part Number Changes 2
- Finishes 3
- Outside Trim Functions 3
- Strikes 3

INTRODUCTION

This manual contains a listing of replaceable parts and assemblies for the 98/9927 Exit Hardware Devices. 98 Series and 99 Series devices are almost identical. The 99 Series has a grooved case; the 98 Series has a smooth case.

HOW TO ORDER

Some parts are sold separately. Other items are available as part of a kit or multiple quantity package. For the best possible service when ordering replacement parts or assemblies, please provide the following information:

- Part number or assembly number
- Description
- Quantity needed
- Finish desired (if available finished)
- Date of original purchase (if known)

To find out the name of your local Von Duprin distributor or sales representative, contact:

Von Duprin Division
Allegion
2720 Tobey Drive
Indianapolis, IN 46219
Phone: 877-671-7011

PART NUMBER AND AVAILABILITY CHANGES

This manual was designed to help illustrate the replacement parts and kits that are available for sale. Because of changes to the product and/or manufacturing process, part numbers and availability can change over time.

98/99 SERIES FINISHES

U.S. Std Reference	BHMA Reference	Description
US3	605	Polished Brass
US4	606	Dull Brass
US10	612	Dull Bronze
US15	619	Satin Nickel
US26	625	Polished Chrome
US26D	626	Dull Chrome
US28	628	Anodized Alum. (Clear)
US32D	630	Satin Stainless Steel
313AN	710	Anodized Alum. (313) Dark Bronze
315AN	711	Anodized Alum. (Black)

OUTSIDE TRIM FUNCTIONS

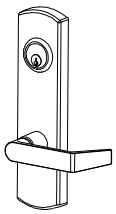

992L
996L
992L-NL**
996L-NL**

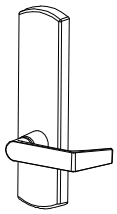

992L-BE*
996L-BE*
992L-DT***
996L-DT***

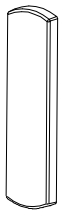

992EO
996EO

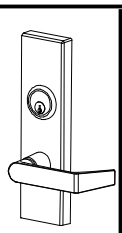

994L
994L-NL**

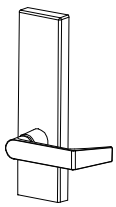

994L-BE*
994L-DT***

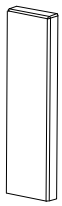

994EO

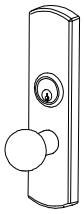

991K
991K-NL**

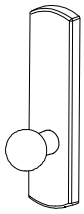

991K-BE*
991K-DT***

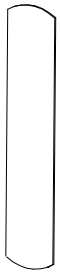

990EO

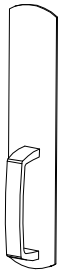

990DT***

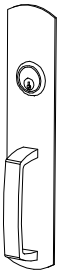

990NL**

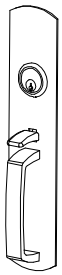

990TP

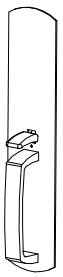

990TP-BE*

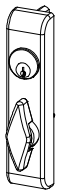

374T



110NL****

* "BE" (Blank Escutcheon) no cylinder used - lever always active
** "NL" (Night Latch) rigid lever - key retracts latch bolt
*** "DT" (Dummy Trim) rigid lever for pull operation
**** Optional Pull needs to be added

STANDARD STRIKES

① Metal Door Screw Package PKGSRV.1023 (Pkg of 10)
Wood Door Screw 964291 (Qty of 1)

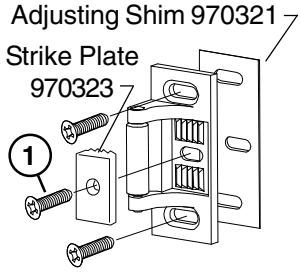

299 (Top) Strike - Standard Single or Double Door Panic Exit Hardware

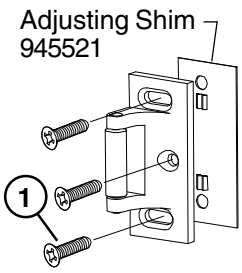

299F (Top) Strike - Single or Double Door Fire Exit Hardware

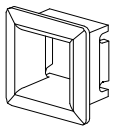

304L (Bottom) Strike Panic or Fire Exit Hardware

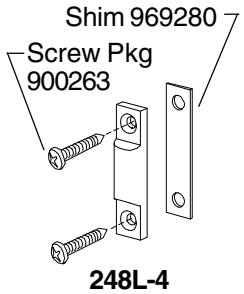

248L-4 (Bottom) Strike Panic Exit Hardware

OPTIONAL STRIKES

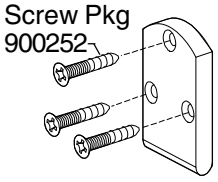

260U (Top) Strike - For Flush Transom Applications Only Panic or Fire Exit Hardware

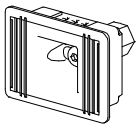

385A (Bottom) Strike Panic or Fire Exit Hardware

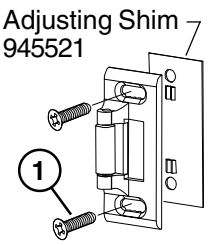

264 (Top) Strike - Single Door Panic Exit Hardware

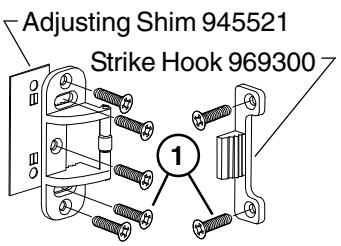

499F (Top) Strike - Supplied with LBR Fire Latch/Strike Kit

98/9927 PANIC DEVICE

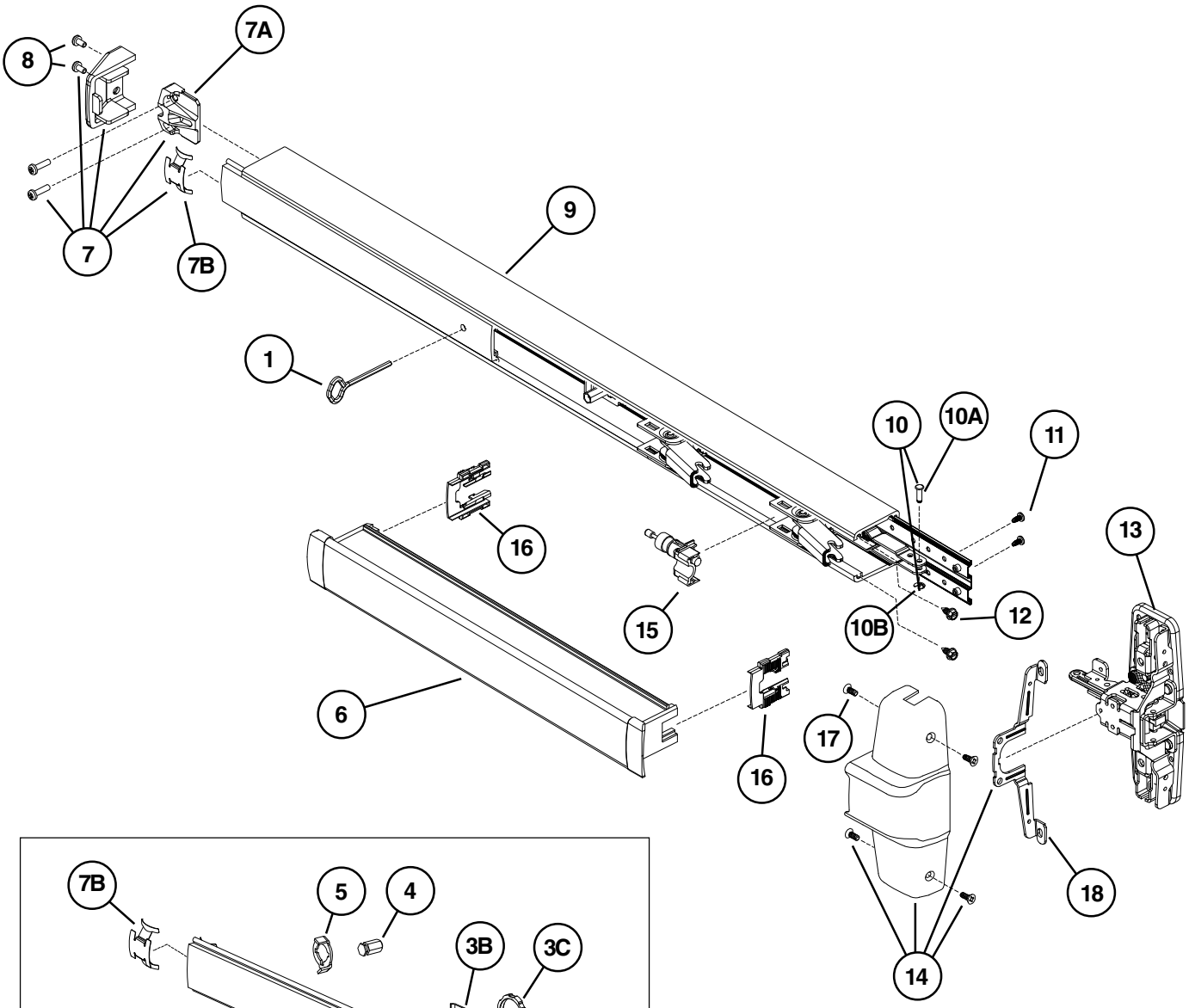

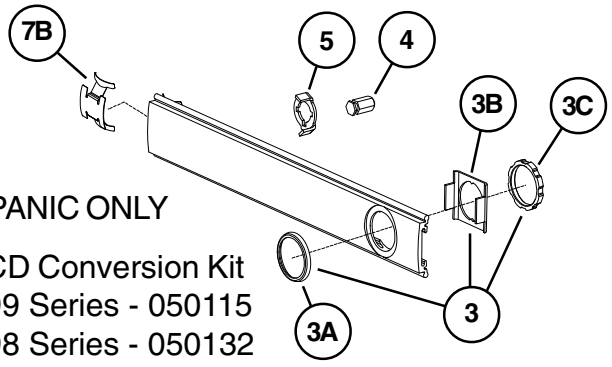

PANIC ONLY

CD Conversion Kit
99 Series - 050115
98 Series - 050132

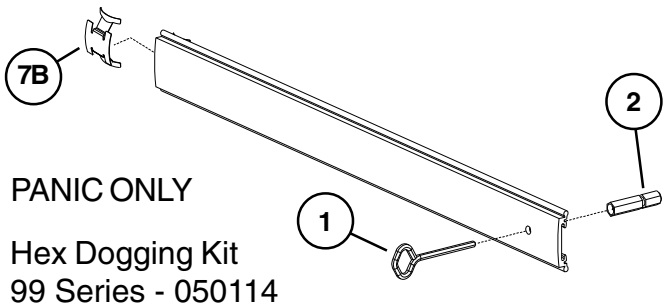

PANIC ONLY

Hex Dogging Kit
99 Series - 050114
98 Series - 050117

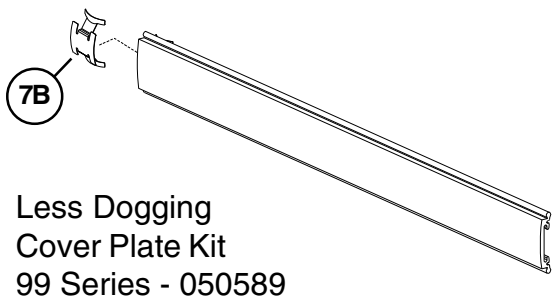

Less Dogging
Cover Plate Kit
99 Series - 050589
98 Series - 050588

98/9927 PANIC DEVICE

Item No.	Quantity	Part No.	Description	Finish
	1	900563	98/9927 Series Mounting Pkg. (1-3/4)	
	1	900568	98/9927 Series Mounting Pkg. (2-1/4)	
1	1	090085	227 Dog Key 5/32" Hex (Pkg of 10)	
1	1	090005	227 Dog Key 5/32" Hex (Pkg of 2)	
2	1	090040	Hex Dog Shaft (Pkg of 2)	
3	1	107813	Cylinder Mounting Pkg	X
3A	1	050525	Cylinder Collar	X
3B	1	050490	Cylinder Locating Washer - CD/SS	
3C	1	050526	Cylinder Locknut	
4	1	090046	CD Dogging Plug (Pkg of 2)	
5	1	090045	CD Actuator Arm (Pkg of 2)	
6	1	*PBKIT	98/99 Series Push Bar Retrofit Kit - 3' Door	X
6	1	*PBKIT	98/99 Series Push Bar Retrofit Kit - 4' Door	X
7	1	050014	98/99 Series End Cap Kit	X
7A	1	050524	Impact Resistant End Cap Bracket	
7B	1	090036	Cover Plate Anti-rattle Spring (Pkg of 10)	
8	1	900597	Device End Cap and C/Case Screw Pkg.	X
9	1	968144	99 Series Mechanism Case - 3' Door	X
9	1	968146	99 Series Mechanism Case - 4' Door	X
9	2	970191	98 Series Mechanism Case - 3' Door	X
9	1	970192	98 Series Mechanism Case - 4' Door	X
10	1	050529	98/99 Series Control Link Pin & Ret. Ring	
10A	1	090031	98/99 Series Control Link Pin (Pkg of 10)	
10B	1	090107	Retaining Ring (Pkg of 10)	
11	2	090037	#8-32 x 3/8" Baseplate Screw (Pkg of 10)	
12	2	090073	Mechanism Case Bracket Screw (Pkg of 10)	
13***	1	050021	98/9927/-F Center Case Kit Less Cover	
14**	1	050072	98/9927/-F Center Case Cover Kit	X
15	1	050491	Shock Absorber & Holder Assembly	
16	2	090049	Push Bar Guide (Pkg of 10)	
17	4	900892	Center Case Cover Screws (Pkg of 4)	X
18	1	050564	Center Case Cover Bracket	

X in "Finish" column designates finished items; finish must be specified when ordering.

* To order, specify device type, size, and finish. Example: PBKIT 98 3' US28.

**Includes parts for three piece cover conversion.

***Center case assembly parts shown on page 11.

98/9927-F FIRE DEVICE

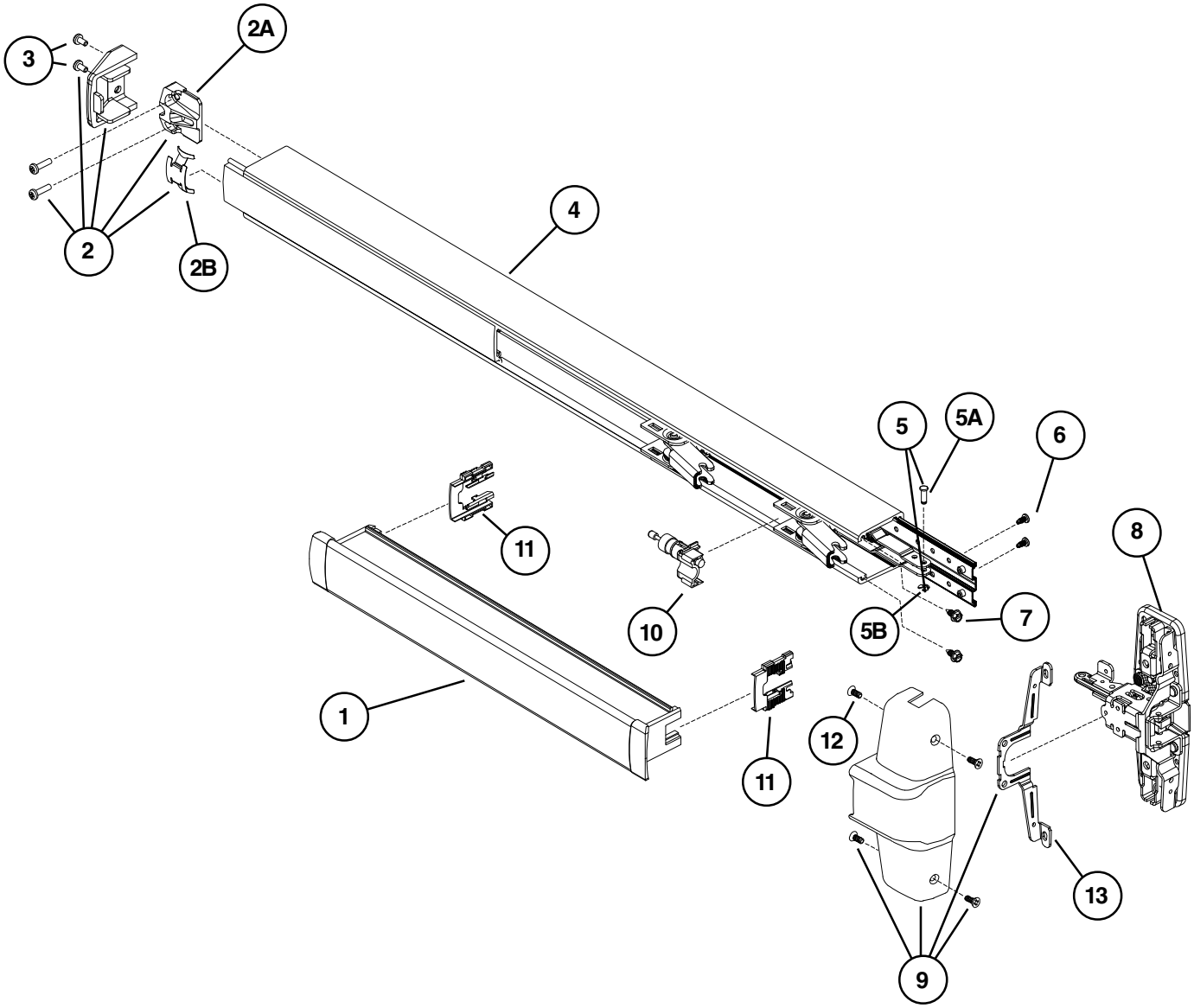

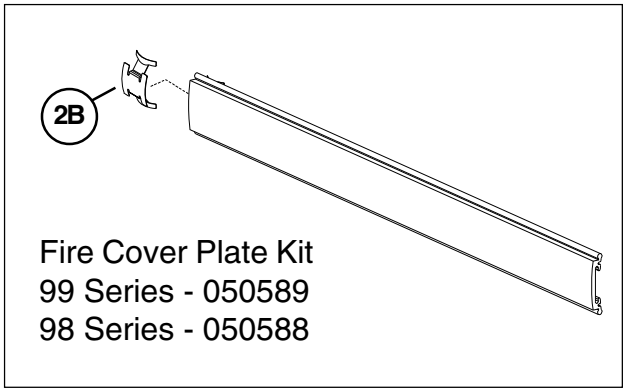

98/9927-F FIRE DEVICE

Item No.	Quantity	Part No.	Description	Finish
	1	900563	98/9927 Series Mounting Pkg. (1-3/4)	
	1	900568	98/9927 Series Mounting Pkg. (2-1/4)	
1	1	*PBKIT	98/99 Series Push Bar Retrofit Kit - 3' Door	X
1	1	*PBKIT	98/99 Series Push Bar Retrofit Kit - 4' Door	X
2	1	050014	98/99 Series End Cap Kit	X
2A	1	050524	Impact Resistant End Cap Bracket	
2B	1	090036	Cover Plate Anti-rattle Spring (Pkg of 10)	
3	1	900597	Device End Cap and C/Case Screw Pkg.	X
4	1	968144	99 Series Mechanism Case - 3' Door	X
4	1	968146	99 Series Mechanism Case - 4' Door	X
4	1	970191	98 Series Mechanism Case - 3' Door	X
4	1	970192	98 Series Mechanism Case - 4' Door	X
5	1	050529	98/99 Series Control Link Pin & Ret. Ring	
5A	1	090031	98/99 Series Control Link Pin (Pkg of 10)	
5B	1	090107	Retaining Ring (Pkg of 10)	
6	2	090037	#8-32 x 3/8" Baseplate Screw (Pkg of 10)	
7	2	090073	Mechanism Case Bracket Screw (Pkg of 10)	
8***	1	050021	98/9927/-F Center Case Kit Less Cover	
9**	1	050072	98/9927/-F Center Case Cover Kit	X
10	1	050491	Shock Absorber & Holder Assembly	
11	2	090049	Push Bar Guide (Pkg of 10)	
12	4	900892	Center Case Cover Screws (Pkg of 4)	X
13	1	050564	Center Case Cover Bracket	

X in "Finish" column designates finished items; finish must be specified when ordering.

* To order, specify device type, size, and finish. Example: PBKIT 98 3' US28.

**Includes parts for three piece cover conversion.

***Center case assembly parts shown on page 11.

98/9927 VERTICAL RODS AND LATCHES

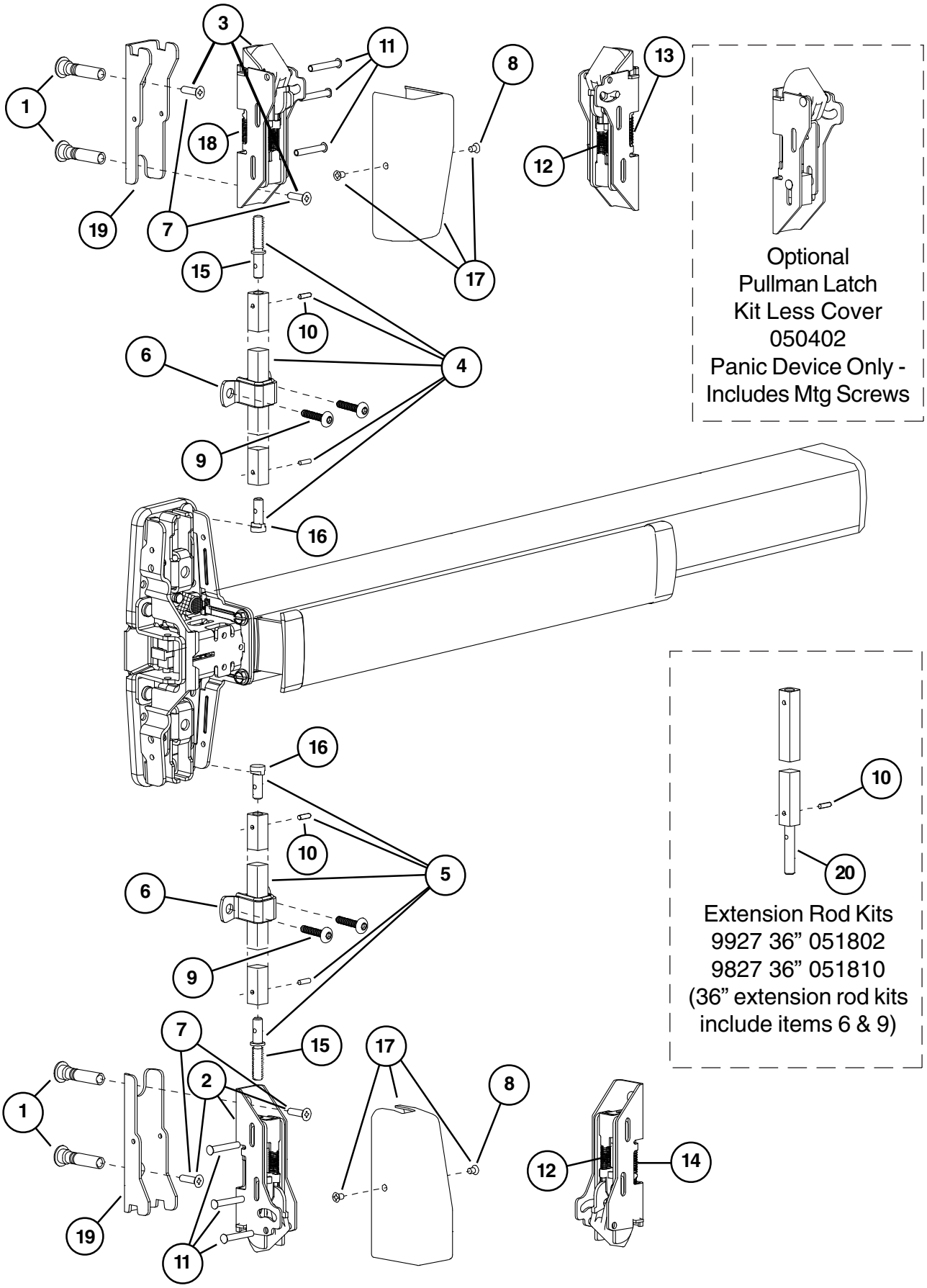

Optional
Pullman Latch
Kit Less Cover
050402
Panic Device Only -
Includes Mtg Screws

Extension Rod Kits
9927 36" 051802
9827 36" 051810
(36" extension rod kits
include items 6 & 9)

98/9927 VERTICAL RODS AND LATCHES

Item No.	Quantity	Part No.	Description	Finish
1	2	034902	325 Sex Bolt Package (Pkg of 2)	X
2	1	050401	98/9927 Bottom Latch Kit Less Cover	
3	1	050400	98/9927 Top Latch Kit Less Cover	
4	1	050512	9927 Top Rod Kit	X
4	1	050513	9827 Top Rod Kit	X
5	1	050514	9927 Bottom Rod Kit	X
5	1	050515	9827 Bottom Rod Kit	X
6	2	112063	98/9927 Rod Guide Pkg	X
7	1	900589	Latch Mounting Package (Pkg of 4)	
8	2	900850	Latch Case Cover Screw (Pkg of 2)	X
9	2	900919	98/9927 Rod Guide Mounting Package	
10	4	090054	Rod Roll Pin (Pkg of 10)	
11	6	090055	Housing Guide Pin (Pkg of 10)	
12	2	090065	Bolt Return Spring (Pkg of 10)	
13	1	090056	Top Latch Compression Spring (Pkg of 10)	
13	1	090057	PL Top Latch Spring (Pkg of 10)	
14	1	090058	Bottom Latch Case Spring (Pkg of 10)	
15	2	090067	Rod Connector - Latch (Pkg of 2)	
16	2	090068	Rod Connector - Center Case (Pkg of 2)	
17	1	050566	98/9927/27-F Latch Case Cover Kit	X
18	1	090076	Aux. Bolt Spring (Pkg of 10)	
19	2	050546	Latch Case Mtg. Bracket Kit	
20	1	090075	98/9927 Rod Extension Connector (Pkg of 4)	
*	1	050090	98/9927 Bottom Latch Retrofit Kit	X
*	1	050091	98/9927 Top Latch Retrofit Kit	X

X in “Finish” column designates finished items; finish must be specified when ordering.

* For devices shipped before October 1998.

98/9927 PANIC DEVICE BASEPLATE ASSEMBLY

Item No.	Quantity	Part No.	Description	Finish
1	1	090043	Dogging adapter (Pkg of 2)	
2	1	090042	Dogging adapter spring (Pkg of 2)	
3	1	090041	Dogging spring (Pkg of 2)	
4	1	090040	Hex dogging shaft (Pkg of 2)	
5	1	090044	Dogging hook (Pkg of 2)	
6	1	090039	Latch return spring (Pkg of 10)	
7	4	090038	Rubber bumper (Pkg of 4)	
8	1	050491	Shock absorber	

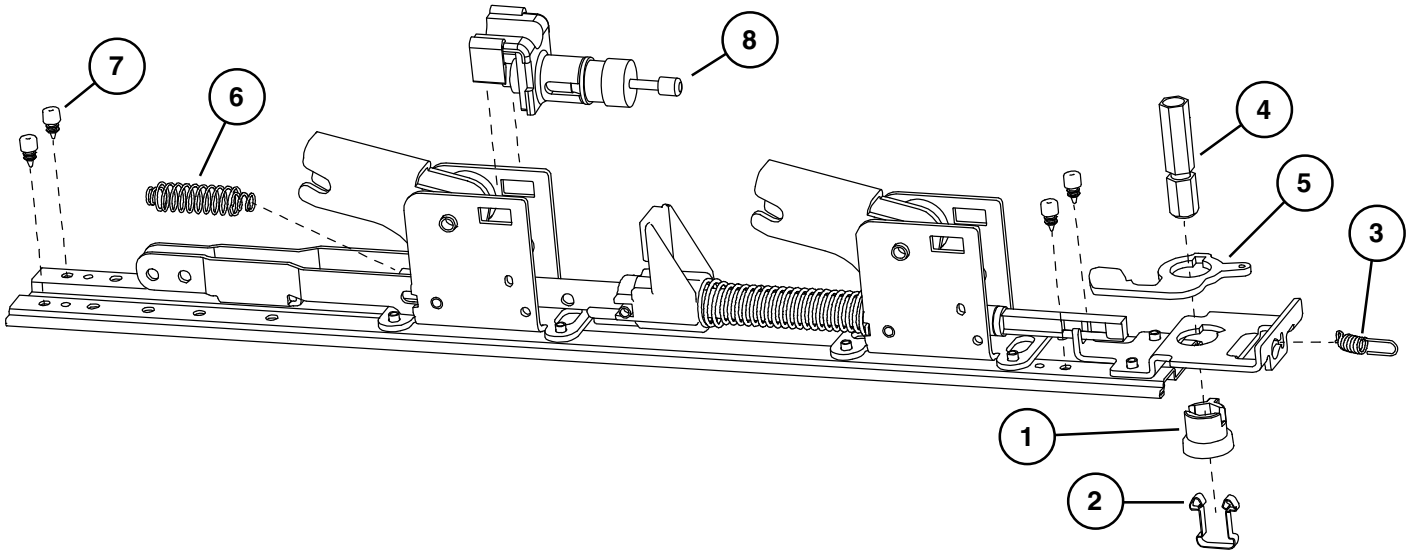

98/9927-F FIRE DEVICE BASEPLATE ASSEMBLY

Item No.	Quantity	Part No.	Description	Finish
1	4	090038	Rubber bumper (Pkg of 4)	
2	1	090039	Latch return spring (Pkg of 10)	
3	1	050491	Shock absorber	

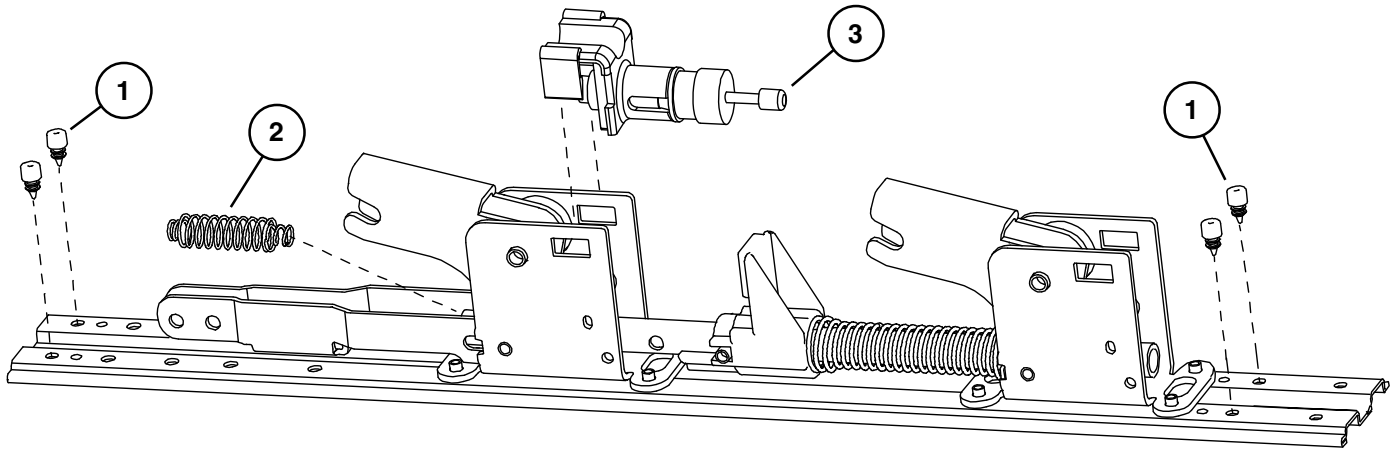

98/9927 DEVICE CENTER CASE ASSEMBLY

Item No.	Quantity	Part No.	Description	Finish
1	2	090107	Retaining Ring (Pkg of 10)	
2	2	090079	Latch Bolt Pin (Pkg of 10)	
3	1	090074	NL Drive Screw (Pkg of 10)	
4	1	050565	Center Case Reinforcing Bracket	

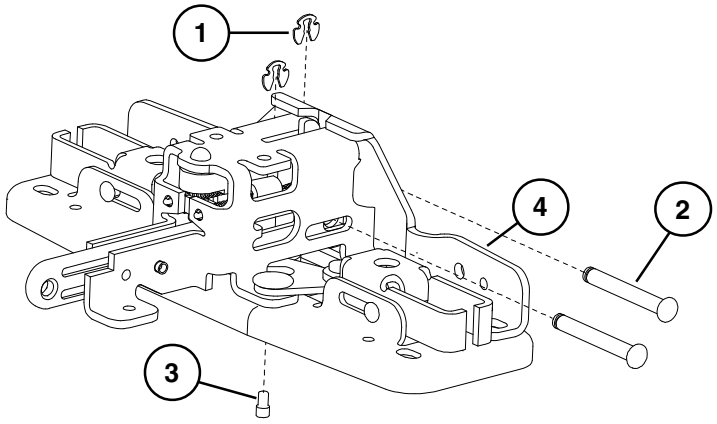

98/9927-F LBR (LESS BOTTOM ROD) FIRE LATCH KIT

Item No.	Quantity	Part No.	Description	Finish
1	1	050171	LBR Fire Latch/Strike kit	
2	1	050509	LBR Fire Strike Plug	
3	1	090088	98/9927-F LBR Latch Spring Pkg of 10	
4	1	900980	98/9927-F LBR Latch Mounting Package	

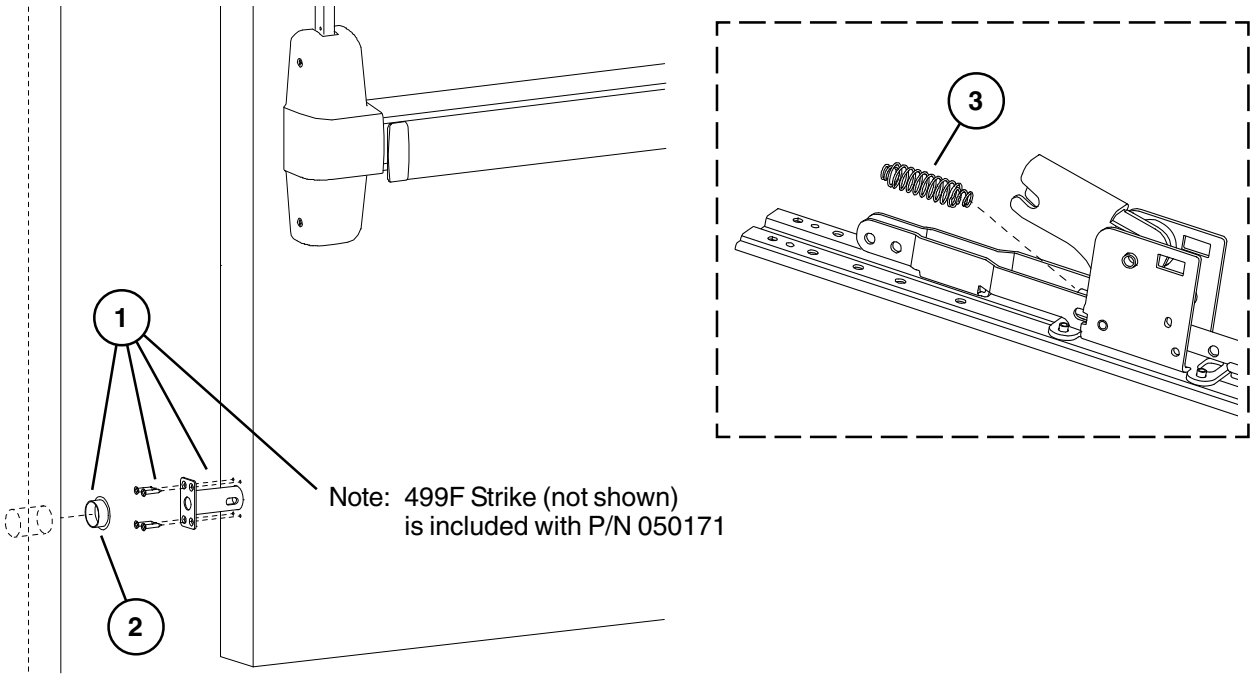

HD-EL9827/HD-EL9927 HEX DOGGING/ELECTRIC LATCH RETRACTION OPTION - PANIC DEVICE ONLY

Item No.	Quantity	Part No.	Description	Finish
1	1	050531	EL Dogging Rod Kit - 3’ device	
1	1	050532	EL Dogging Rod Kit - 4’ device	
2	1	110388	EL 6’ Cable and Connector	
3	1	050534	EL Potted Module	
4	1	050536	HD-EL Solenoid	
5	1	050537	HD-EL Solenoid Plunger	
6	1	050538	EL Dogging Rod Retainer	
7	1	050539	EL Receptacle Connector - 2 Position	
8	2	050540	EL Female Terminal	
9	1	050541	HD-EL Dog Screw	
10	1	050542	HD-EL Solenoid Bracket	
11	1	050543	HD-EL Dogging Spring	
12	1	990599	EL Plug Connector - 2 Position	
13	1	990857	EL Receptacle Connector - 3 Position	
14	1	990858	EL Plug Connector - 3 Position	
*	1	050384	HD-EL Conversion Kit - 3’	
*	1	050385	HD-EL Conversion Kit - 4’	

*Kit includes items 1-11 plus new control link, retaining ring, and baseplate screws.

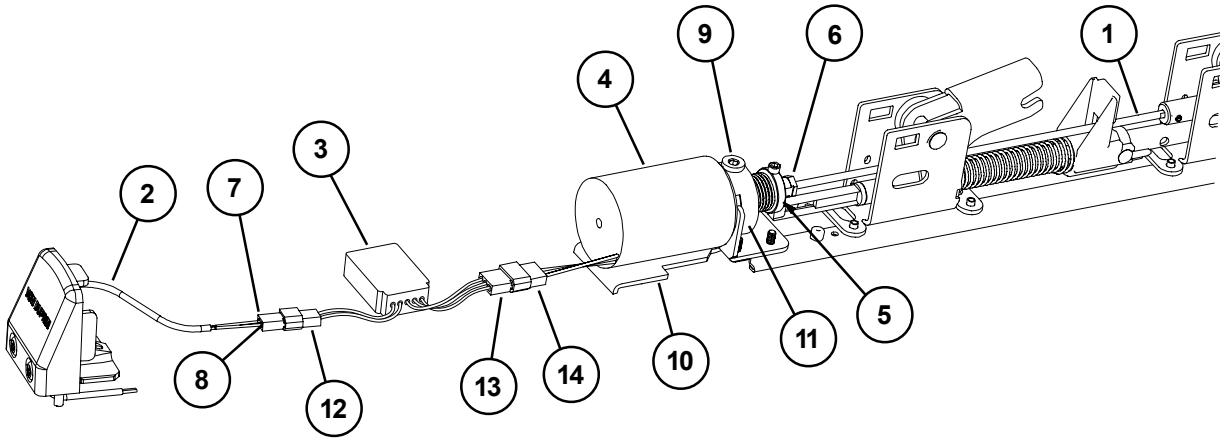

EL9827/EL9927 SERIES ELECTRIC LATCH RETRACTION OPTION

Item No.	Quantity	Part No.	Description	Finish
1	1	050531	EL Dogging Rod Kit - 3' device	
1	1	050532	EL Dogging Rod Kit - 4' device	
2	1	110388	EL 6' Cable and Connector	
3	1	050534	EL Potted Module	
4	1	050535	EL Solenoid Assembly	
5	1	050538	EL Dogging Rod Retainer	
6	1	050539	EL Receptacle Connector	
7	2	050540	EL Female Terminal	
8	1	990599	EL Plug Connector - 2 Position	
9	1	990857	EL Receptacle Connector - 3 Position	
10	1	990858	EL Plug Connector - 3 Position	
*	1	050070	EL Conversion Kit - 3'	
*	1	050078	EL Conversion Kit - 4'	

*Kit includes items 1-7 plus new control link pin, retaining ring, and baseplate screws.

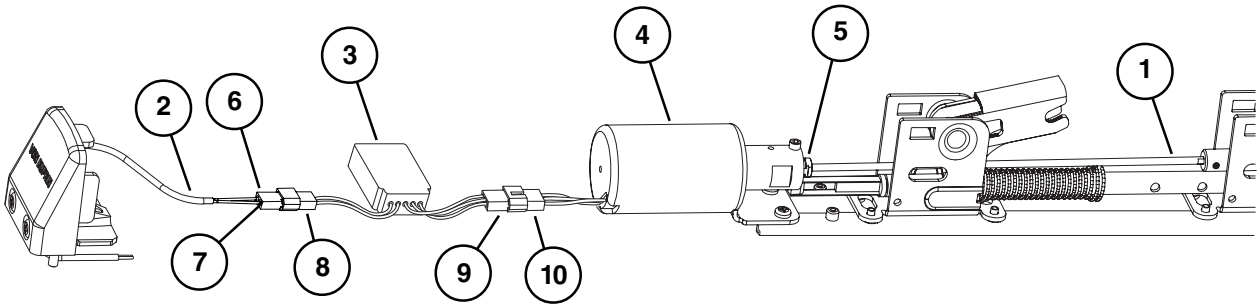

SS9827/SS9927 SERIES (SIGNAL SWITCH) OPTION

Item No.	Quantity	Part No.	Description	Finish
1	1	050544	SS Cable	
2	1	050545	SS Housing	
3	1	990601	SS Plug Connector - 6 Position	
4	1	990602	SS Receptacle Connector - 6 Position	

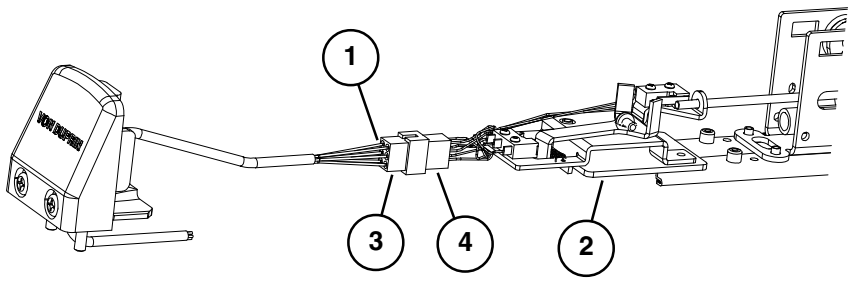

98/9927 SERIES LX (LATCH BOLT MONITOR) & RX (REQUEST TO EXIT) OPTIONS

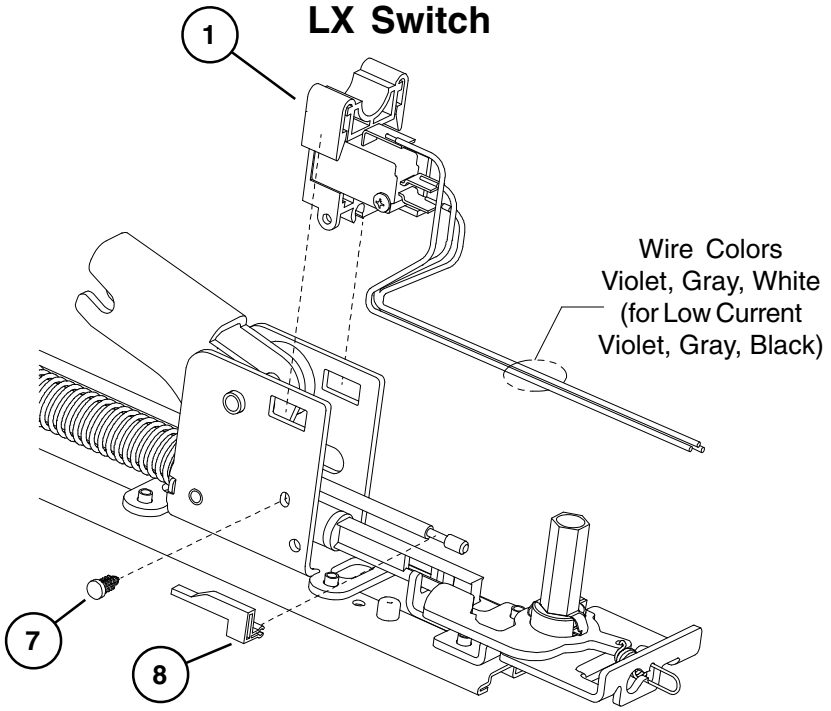

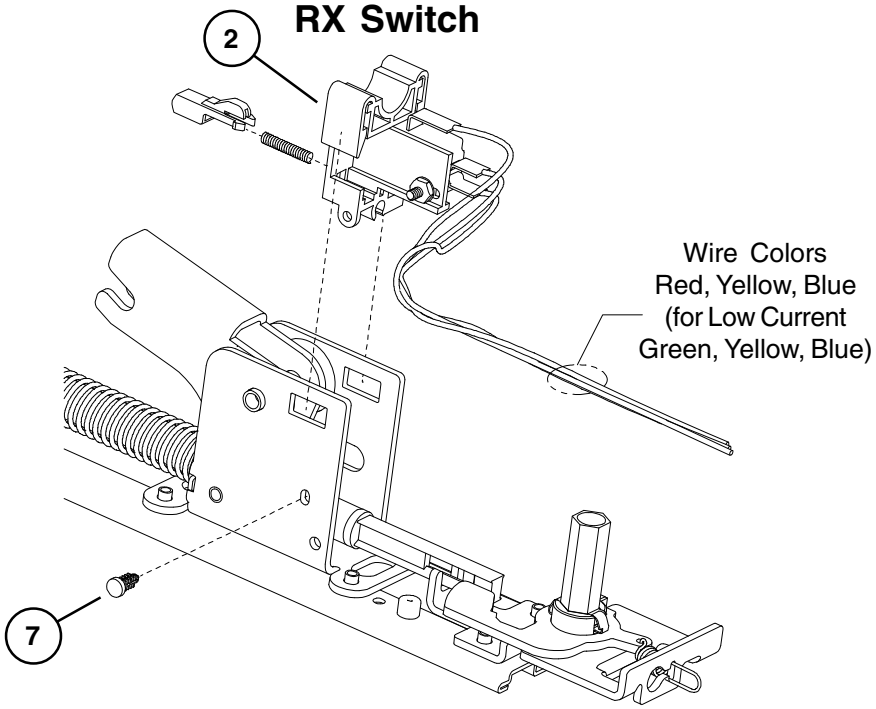

98/9927 SERIES LX (LATCH BOLT MONITOR) & RX (REQUEST TO EXIT) OPTIONS

Item No.	Quantity	Part No.	Description	Finish
1	1	050254	LX Switch Kit 3’ Device	
1	1	050255	LX Switch Kit 4’ Device	
1	1	050247	LX-EL Switch Kit	
1	1	050283	LX-LC (Low Current) Switch Kit 3’ Device	
1	1	050285	LX-LC (Low Current) Switch Kit 4’ Device	
1	1	050287	LX-LC-EL (Low Current) Switch Kit	
2	1	050251	RX Switch Kit	
2	1	050281	RX-LC (Low Current) Switch Kit	
3	1	050256	LX-RX Switch Kit 3’ Device	
3	1	050257	LX-RX Switch Kit 4’ Device	
3	1	050259	LX-RX-EL Switch Kit	
3	1	050289	LX-RX-LC (Low Current) Sw. Kit 3’ Device	
3	1	050291	LX-RX-LC (Low Current) Sw. Kit 4’ Device	
3	1	050293	LX-RX-LC-EL (Low Current) Switch Kit	
2 & 4	1	050270	RX-2 Switch Kit	
4	1	050271	RX-AUX Switch Kit	
5	1	964558	8-32 x 5/16” PPHMS	
6	1	964019	#8 Washer	
7	1	090099	Pine Tree Clip (Pkg of 10)	
8	1	971091	LX Actuator	

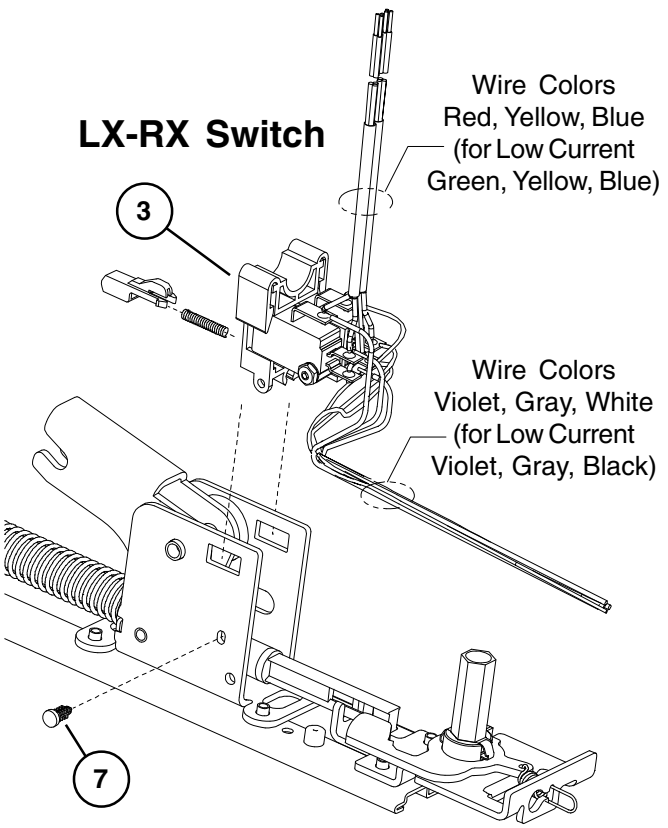

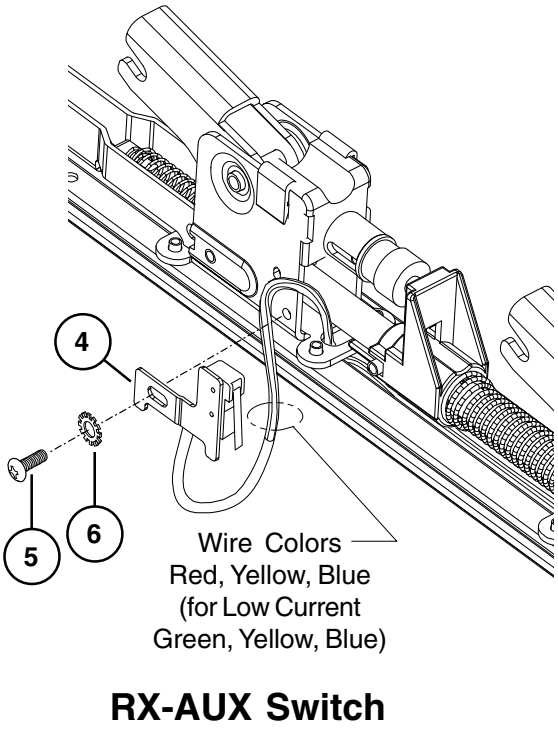

CX98/9927 SERIES CHEXIT AND CX-RCM OPTION

For discontinued Chexit devices made before August, 24 2015

Item No.	Quantity	Part No.	Description	Finish
1	1	050228	Chexit PCB Kit - 15 Second Release	
1*	1	050700	Chexit PCB Kit - 30 Second Release	
1	1	050701	Chexit PCB Kit - 0 Second Release	
1	1	050702	Chexit PCB Kit - Boca 15 Second Release	
1*	1	050703	Chexit PCB Kit - Boca 30 Second Release	
2	1	050533	CX Solenoid and Plunger	
3	1	113111	Faceplate and Adapter	X
4	4	963898	6-32 x 3/8” OPHMS Faceplate Screw	X
5	1	991338	RCM 2-Wire RX Cable	
6	1	991339	RCM 3-Wire Solenoid Cable	
7	1	112018	Chexit Wiring Assembly	
8	1	991336	CX-RCM Cable Assy - 5 Wire	
9	1	090036	Cover Plate Anti-rattle Spring (Pkg of 10)	
10	1	970513	LED Cover Mask - Chexit	
11	1	970519	LED Cover - Chexit	
12	1	113781	Sign 15 Second - Chexit	
13	1	113782	Sign 30 Second - Chexit	

*Over 15 second delay requires a letter of approval from the authority having local jurisdiction over the premises prior to the installation of the device. Allegion cannot grant such approval nor does it warrant local jurisdiction compliance.

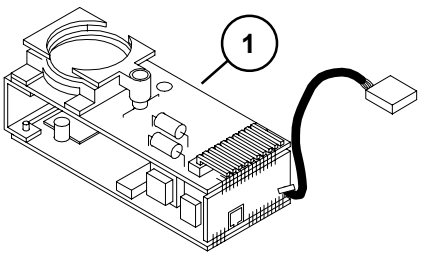

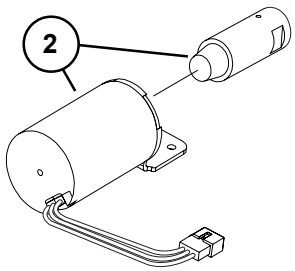

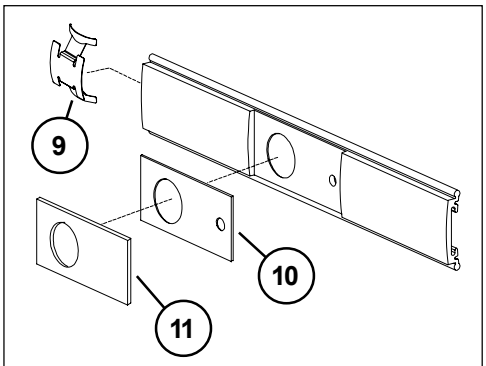

CX Cover Plate Kit
99 Series - 050572
98 Series - 050573

RCM Kit Less Module - CX98 - 050376
RCM Kit Less Module - CX99 - 050375

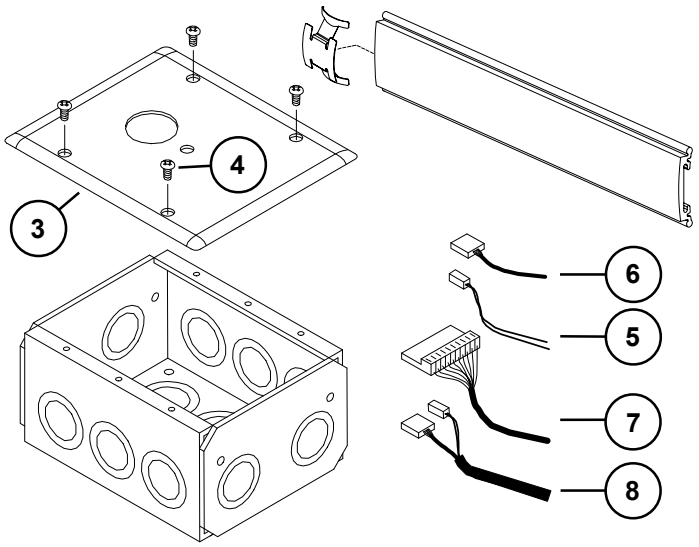



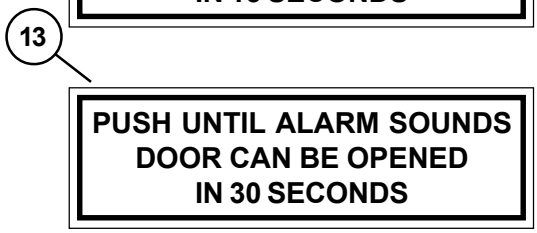

CX98/9927 SERIES CHEXIT

For new Chexit devices made after August, 24 2015

Item No.	Quantity	Part No.	Description	Finish
1	1	040086	Standard - 15 Second Release Delay	
1*	1	040087	Special Infinite Release Delay	
1*	1	040088	Special 30 Second Release Delay	
1	1	040089	Special 0 Second Release Delay	
1	1	040090	Special Mute 15 Second Release Delay	
1	1	040091	BOCA 15 Second Release Delay	
2	1	040191	CX Field Wiring Cable	
3	1	040192	CX Motor Cable	
4	1	040193	CX Trim Device Cable	
5	1	116717	CX RX Switch Assembly	
6	1	040170	CX Key Switch Assembly 3'	
6	1	040189	CX Key Switch Assembly 4'	
7	1	040093	CX33/99 Cover Plate Kit	X
7	1	040094	CX35/98 Cover Plate Kit	X
8	1	113781	Sign 15 Second	
9	1	113782	Sign 30 Second	

*Over 15 second delay requires a letter of approval from the authority having local jurisdiction over the premises prior to the installation of the device. Allegion cannot grant such approval nor does it warrant local jurisdiction compliance.

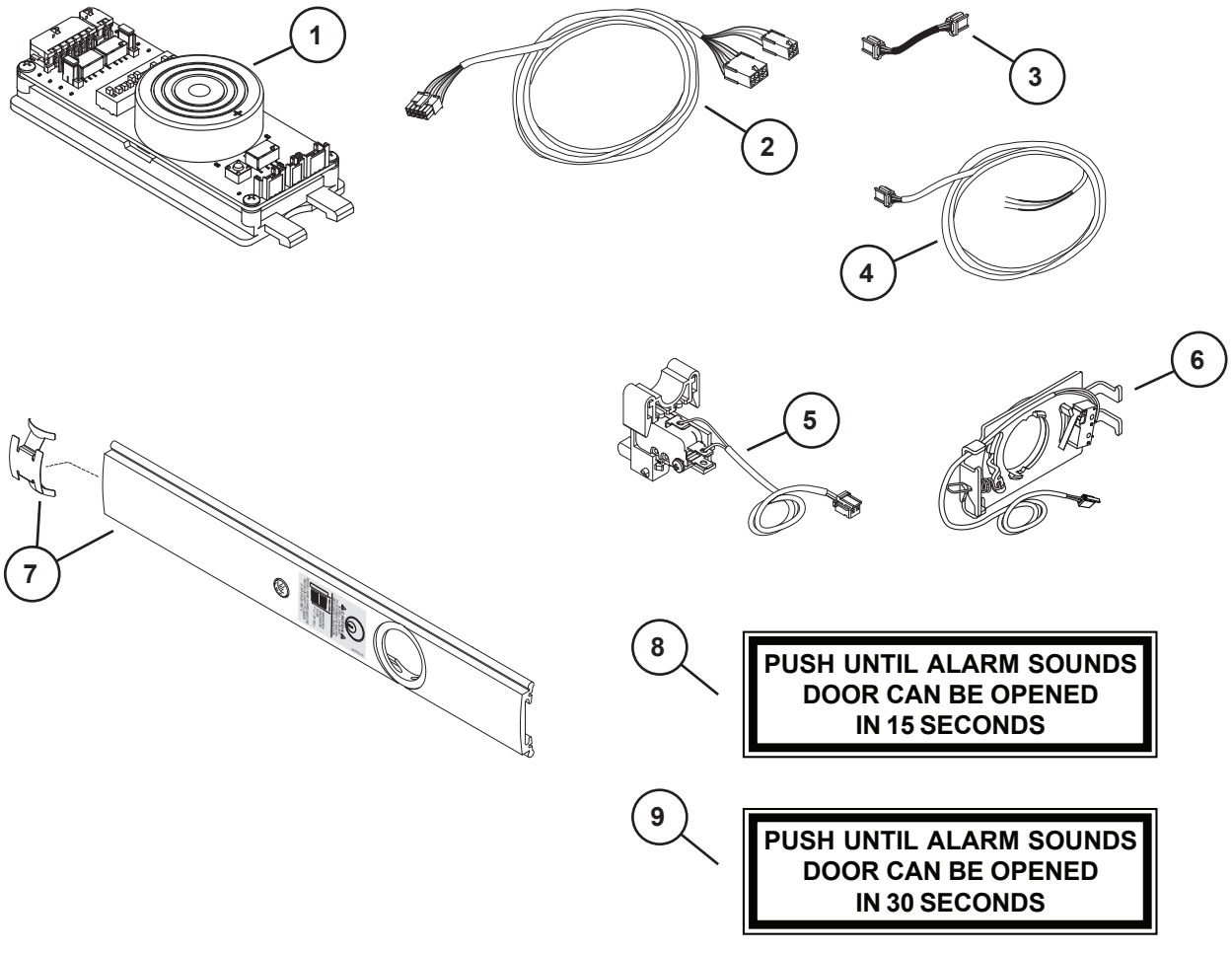

CX-RCM/DE5300 OPTIONS

For new RCM/DE5300 devices made after August, 24 2015

Item No.	Quantity	Part No,	Description	Finish
1	1	116711	Standard - 15 Second Release Delay	
2	1	040092	RCM Device Cable	
3	1	040188	DE5300/RCM Cable Kit	
4	1	040198	RCM Kit Less Module - CX33/99	X
4	1	040199	RCM Kit Less Module - CX35/98	X
5	1	040169	DE5300/RCM Key Switch Assy	
6	1	113781	Sign 15 Second	

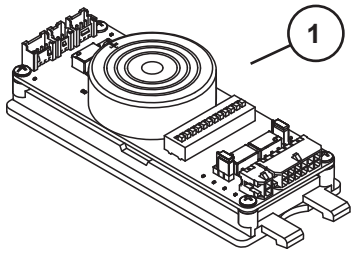

3 RCM/DE5300 Cable Kit

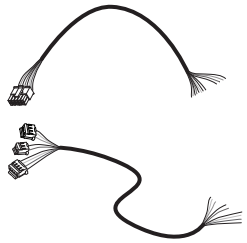

Field Wiring Cable

Device Wiring Cable

4 RCM Kit Less Module - CX33/99 - 040198
RCM Kit Less Module - CX35/98 - 040199

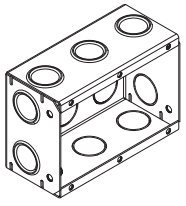

Control Box

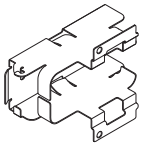

Mounting Bracket

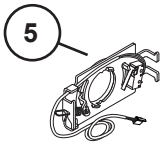

Key Switch

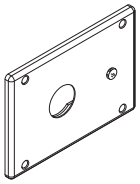

Faceplate



Field Wiring Cable



Device Wiring Cable

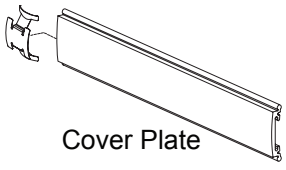

Cover Plate



#6-32 X 3/8" Faceplate Screws (4)

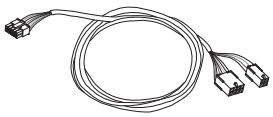

Door Wiring Cable



RCM Device Cable



#6-32 X 1/4" Mounting Bracket Screws (2)

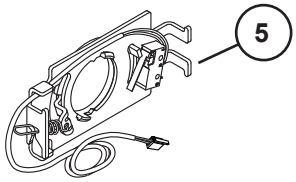



**PUSH UNTIL ALARM SOUNDS
DOOR CAN BE OPENED
IN 15 SECONDS**

CX-CD/SD98/9927 SERIES OPTION

Item No.	Quantity	Part No.	Description	Finish
1*	1	050550	SD98/9927 RHR Center Case Kit Less Cvr	
1*	1	050551	SD98/9927 LHR Center Case Kit Less Cvr	
2	1	050559	SD98/9927 RHR Center Case Cover Kit	X
2	1	050560	SD98/9927 LHR Center Case Cover Kit	X
3	1	112409	CD-CX/SD Cylinder Dog Housing	
4	1	112455	CX-CD/SD Cylinder Dog Bracket Kit RHR	
4	1	112456	CX-CD/SD Cylinder Dog Bracket Kit LHR	
5	4	900892	Center Case Cover Screws	X
6	2	PkgServ.1018	8-32 x 1/4” UFPHMS (Pkg of 20)	
7	1	964240	Bracket Set Screw	

*Parts shown are for the CX-CD/SD option. For other available center case parts refer to page 11.

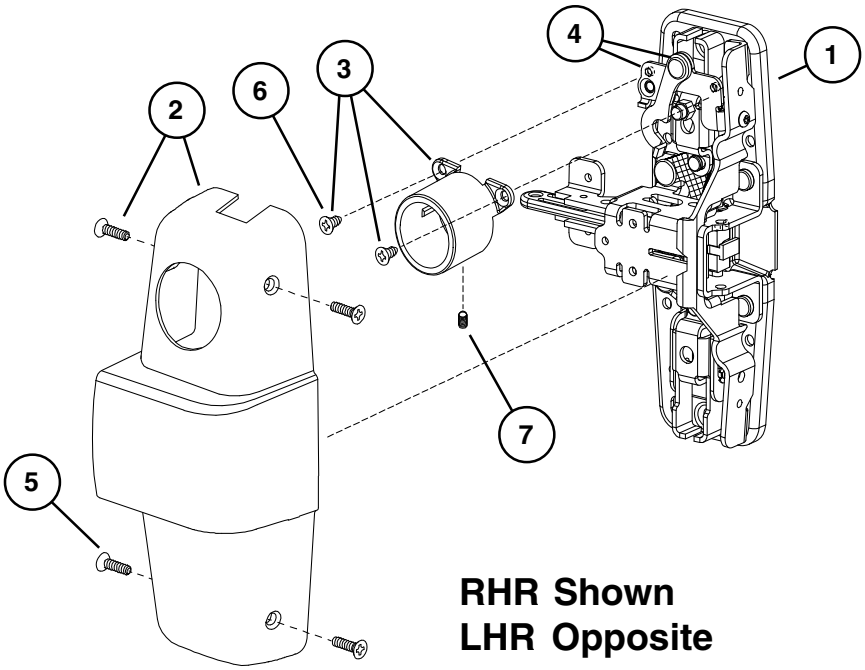

RHR Shown
LHR Opposite

98/9927 ALK EXIT ALARM KIT

Item No.	Quantity	Part No.	Description	Finish
1	1	111795	ALK PCB Assembly	
2	1	050525	Cylinder Collar	X
3	1	969122	ALK Alarm Device Sign	
4	1	969349	ALK Arming Label	
5	1	969350	ALK Disarming Label	
6	1	969354	Retainer Nut	
7	1	970594	ALK Cylinder Spacer	
8	1	090036	Cover Plate Anti-rattle spring (Pkg of 10)	
9	1	971556	ALK Switch Actuator	
10	1	971557	ALK Cylinder Bracket	
11	1	990637	ALK Battery	
12	1	050569	99A Series ALK Cover Plate Kit	X
12	1	050570	98A Series ALK Cover Plate Kit	X

X in “Finish” column designates finished items; finish must be specified when ordering.

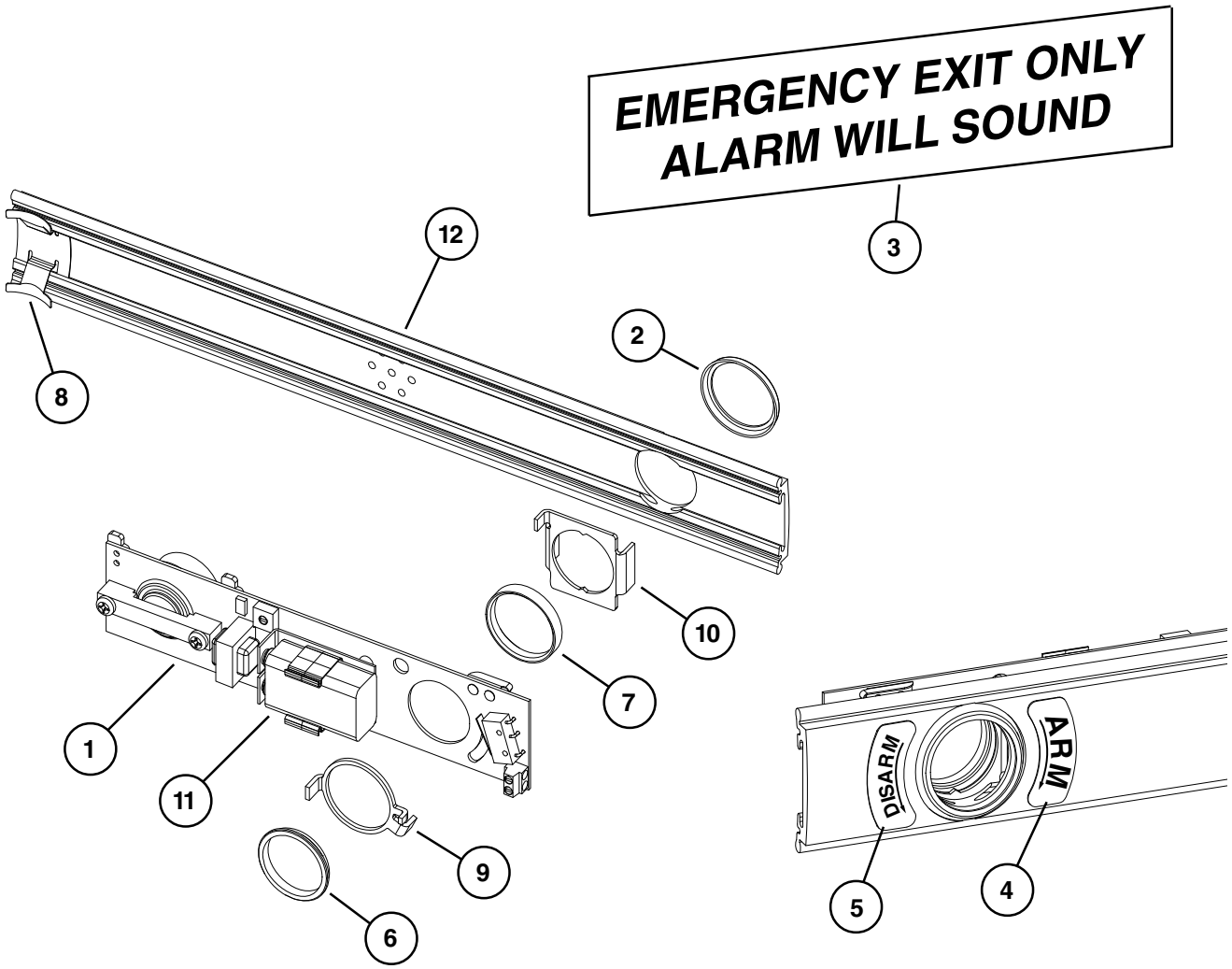

98/9927 SERIES SERVICE REPLACEMENT ITEMS

Item No.	Quantity	Part No.	Description	Finish
1	1	050153	Old Style Hex Dogging Replacement Kit	
2	1	963909	#22 Hitch Pin - Hex/CD Dogging Old Style	
3	1	968112	Old Style Hex Dog Shaft	
4	1	969941	Old Style Dogging Hook	
5	1	968116	Old Style CD Actuator Arm	
6	1	900905	Old Style End Cap and Bracket Assembly	X
7	1	970548	Old Style Cover Plate Stop - End Cap	
8	1	900901	Old Style End Cap Screw Package	X
9	1	971082	Old Style 98/99 End Cap - Stainless Steel	X
9	1	971083	Old Style 98/99 End Cap - Brass	X
9	1	971084	Old Style 98/99 End Cap - Bronze	X
9	1	971085	Old Style 98/99 End Cap - Aluminum	X

X in “Finish” column designates finished items; finish must be specified when ordering.

OLD STYLE DOGGING PARTS
(FOR DEVICES SHIPPED BEFORE AUGUST 1997)

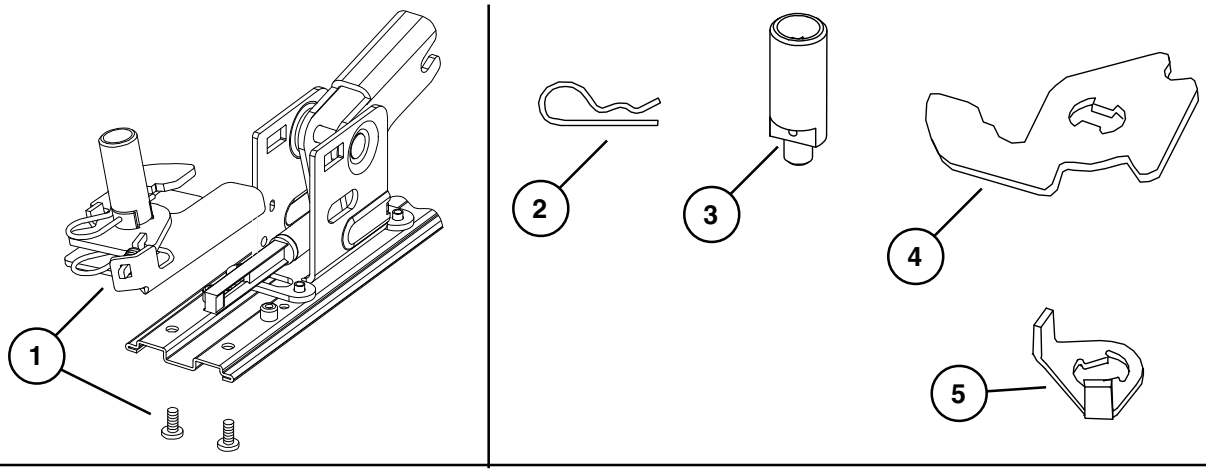

OLD STYLE END CAP PARTS

(FOR DEVICES SHIPPED BEFORE JANUARY 2002)

Note: Newer style end cap kit shown on pages 4-5. Newer style end cap kit can be used on devices manufactured before January 2002, but mechanism case and cover plate on hinge stile must have a square cut and a clean edge.

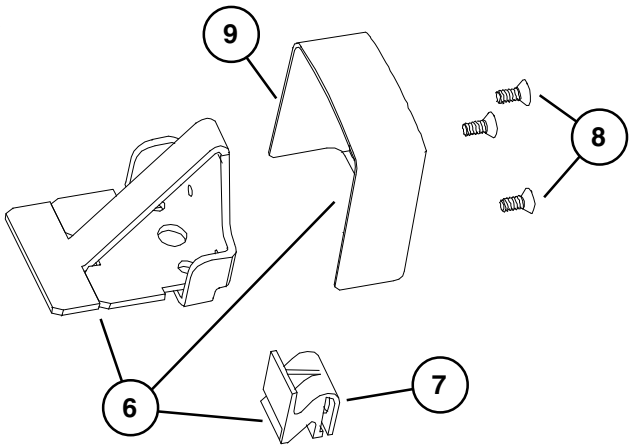

98/9927 SERIES SERVICE REPLACEMENT ITEMS

Item No.	Quantity	Part No.	Description	Finish
1	1	050218	EL Solenoid Replacement Kit	

X in “Finish” column designates finished items; finish must be specified when ordering.

EL SOLENOID REPLACEMENT KIT
(FOR DEVICES SHIPPED BEFORE JANUARY 1987)

Note: This kit replaces the old style EL solenoid parts with the new style.

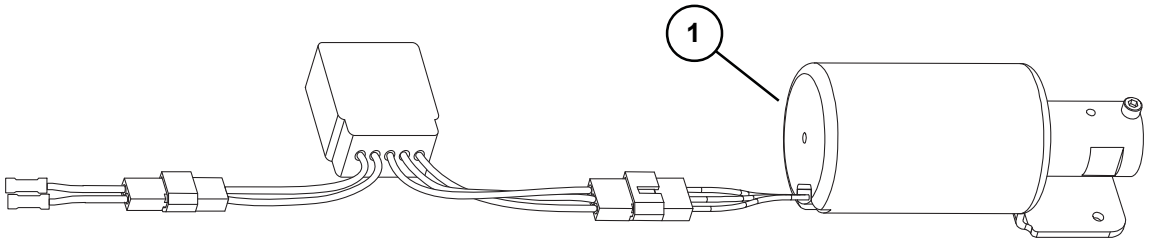

This page intentionally left blank.

About Allegion

Allegion (NYSE: ALLE) creates peace of mind by pioneering safety and security. As a $2 billion provider of security solutions for homes and businesses, Allegion employs more than 8,000 people and sells products in more than 120 countries across the world. Allegion comprises 27 global brands, including strategic brands CISA®, Interflex®, LCN®, Schlage® and Von Duprin®.

For more, visit **www.allegion.com**.

aptiQ ■ **LCN** ■ SCHLAGE ■ **STEELCRAFT** ■ **VON DUPRIN**

© 2019 Allegion
108731, Rev. 05/19
www.allegion.com/us

ALLEGION™