Corbin Russwin®

ASSA ABLOY

Installation Instructions

As Easy As A–B–C→F

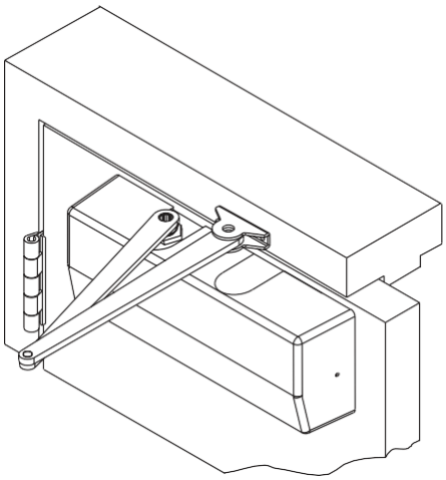

DC8200 Series
Multi-Sized 1 thru 6

Universal Door Closers
Non-Hold Open
with A10 Heavy Duty Arm

IMPORTANT:

- An improperly installed or incorrectly adjusted door closer may cause **property damage** or **personal injury;** and will void product warranty.
- To avoid personal injury, **DO NOT DISASSEMBLE THIS DOOR CLOSER BODY.**
- Door closers must be securely fastened to a properly reinforced door and frame with fasteners provided.

BEFORE INSTALLING:



- The Americans with Disabilities Act (ADA) requires that doors having door closers have an opening force not to exceed 5 lbf.
  Use standard templating for regular arm and parallel arm applications. Jamb mounted applications use the template for 140° door opening to achieve the required opening force.
- The door closer's power size adjustment feature may require adjustment to its lowest setting to comply with ADA opening force guidelines.
- ADA compliant closers are: DC8200.

Size of Door & Door Closer				
Type of Installation	**Interior**	**Exterior In-swinging**	**Recommended Closer Size**	****Max. Opening Force lbs/f**
Regular Arm	2'4"	———	1	8
	3'0"	———	2	14
	3'6"	2'6"	3	16
	4'0"	3'0"	4	22
	4'6"	3'6"	5	24
	5'0"	4'0"	6	26

TO DETERMINE HAND OF YOUR DOOR:

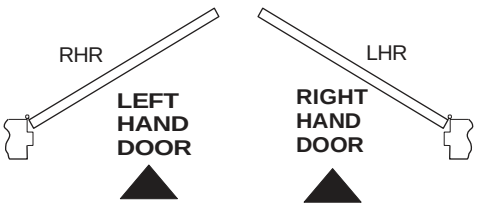

****NOTE: These forces are for standard templating with bearing type hinges and do not account for pressure differentials and draft.**

DC8200xA10 HD Regular Arm Installation Instructions

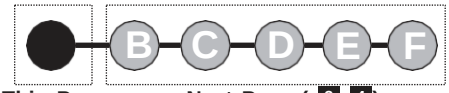

This Page Next Page (3, 4)

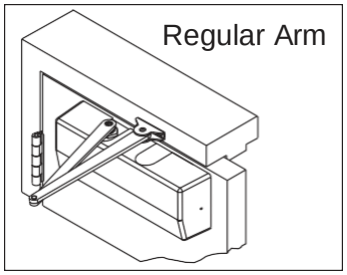

A Template

Mark Door and Jamb (for QUIK-INSTALL® bracket and arm bracket)
For Vertical Dimensions use "Mounting Dimensions Chart"
1-5/8" MINIMUM CLEARANCE REQUIRED OVER DOOR

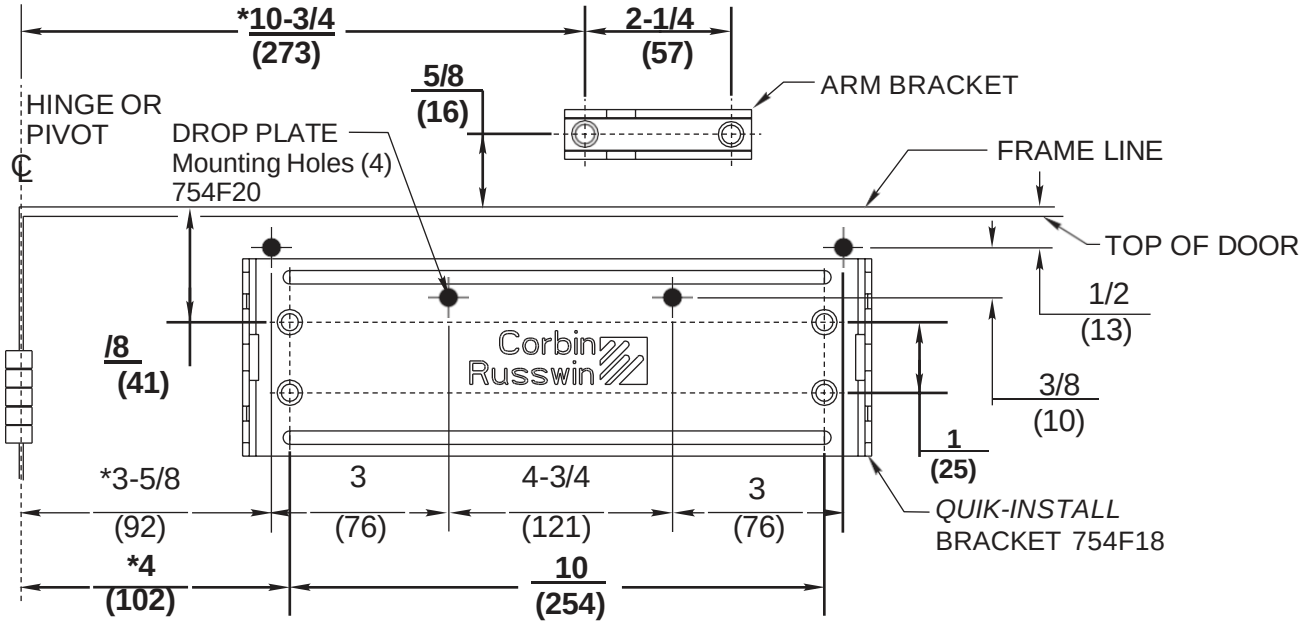

To obtain extra closing force add 3 (77) to dimensions marked.
This will limit degree of door opening to 130°.

MOUNTING SCREW SPECIFICATIONS
ARM AND *QUIK-INSTALL* BRACKET

#12-14 self-drilling screw. 1/8 (3) diameter pilot hole required for Wood Applications. } or { Sex nuts, furnished when ordered

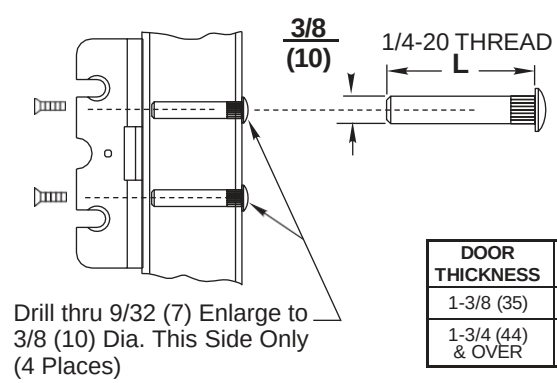

DOOR THICKNESS	SEX NUT LENGTH "L"
1-3/8 (35)	1-9/32 (33)
1-3/4 (44) & OVER	1-21/32 (42)

NOTES:

- Check hand of door, see page 1
- Right Hand Application Shown. Left Hand Opposite
- Dimensions given in inches (mm). Do Not Scale Drawing.
- Closer must be installed in a true horizontal plane to ensure proper closer performance.
- Door opening (up to 180°) is dependent upon door, frame, wall and hinge/pivot conditions permitting.
- Maximum Hinge Side Reveal 1/8 (3).

Corbin Russwin®
ASSA ABLOY

DC8200xA10 HD Regular Arm Installation Instructions



Previous Page(2) This Page Next Page (4)

B Mount QUIK-INSTALL® Bracket

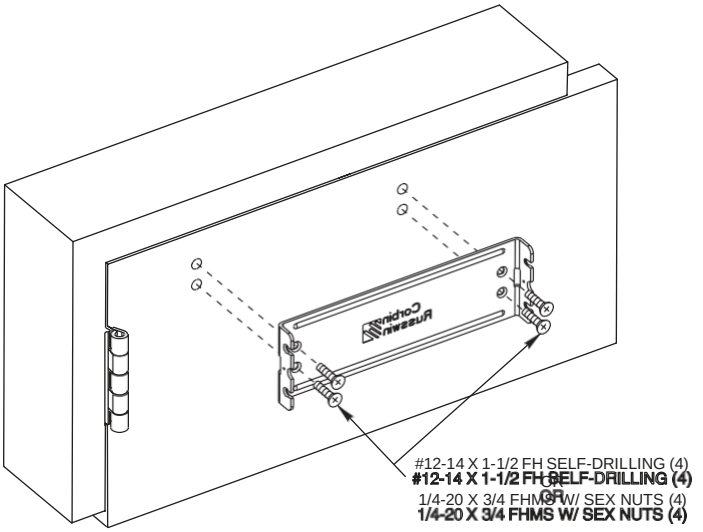

C Mount Closer Body to *QUIK-INSTALL* Bracket

- Start the four mounting screws into the four closer mounting holes.
- Place the closer onto the *QUIK-INSTALL* bracket with the four mounting screws inserted into the four *QUIK-INSTALL* bracket slots.
- Tighten the four mounting screws to fasten the closer body to the *QUIK-INSTALL* bracket.

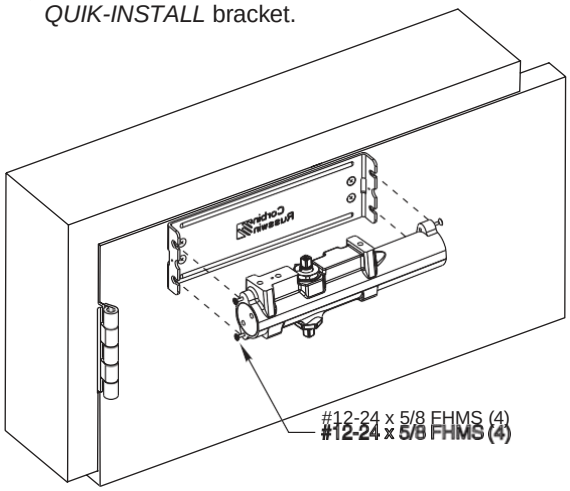

D Position Arm on Closer

Main arm projects straight out at 90° angle to door. Install and tighten 5/16 Hex Head Arm Screw & Washer assembly.

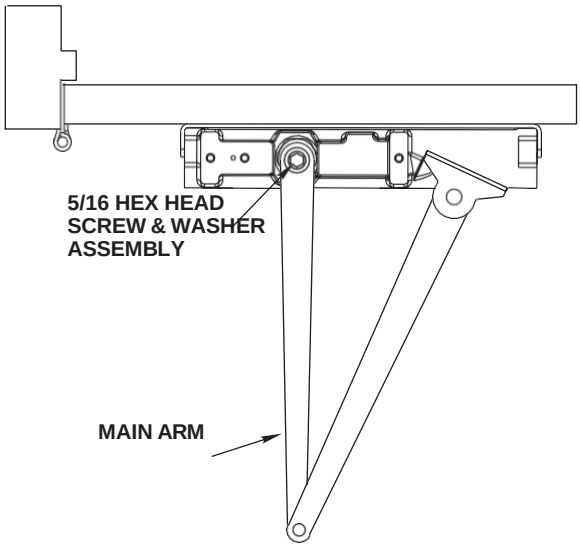

E Preload and Fasten Arm to Frame

Close door, swing arms so that they form a "V" position. Align holes in arm bracket with pre-drilled holes on frame and install attaching screw.

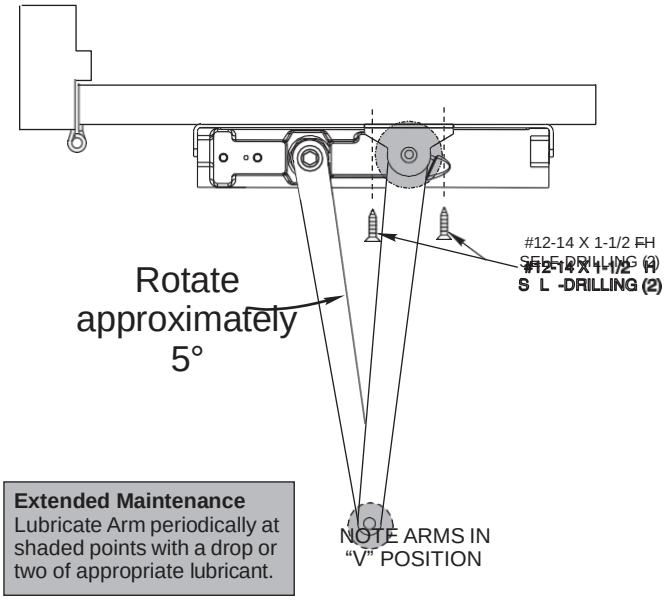

Extended Maintenance
Lubricate Arm periodically at shaded points with a drop or two of appropriate lubricant.

DC8200xA10 HD Regular Arm Installation Instructions

A B C D E F
Previous Page (2 , 3) This Page

F ADJUST CLOSER

Spring Power Adjustment

Locate spring power adjuster from Illustration below

DC8200 Size 1 thru 6 Adjustment See Chart

DC8200 SPRING POWER ADJUSTMENT CHART

- All DC8200 closers are factory set at an approximate **Size 3.**
- Adjust closer as necessary for door size using this chart.
- Readjustment may be required to suit prevailing conditions.

Size of Door			Spring Power Adjustment No. Full Turns Clockwise	Equivalent Closer Size (Approx.)
Interior	Exterior In Swing	Exterior Out Swing		
2' 4" (712)	2'6" (764)	———	1-5	3
2' 6" (764)	3'0" (915)	———	5-8	4
3' 0" (915)	3'6" (1067)	2'6" (764)	8-13	5
3' 6" (1067)	4'0" (1219)	3'0" (915)	13-15	6

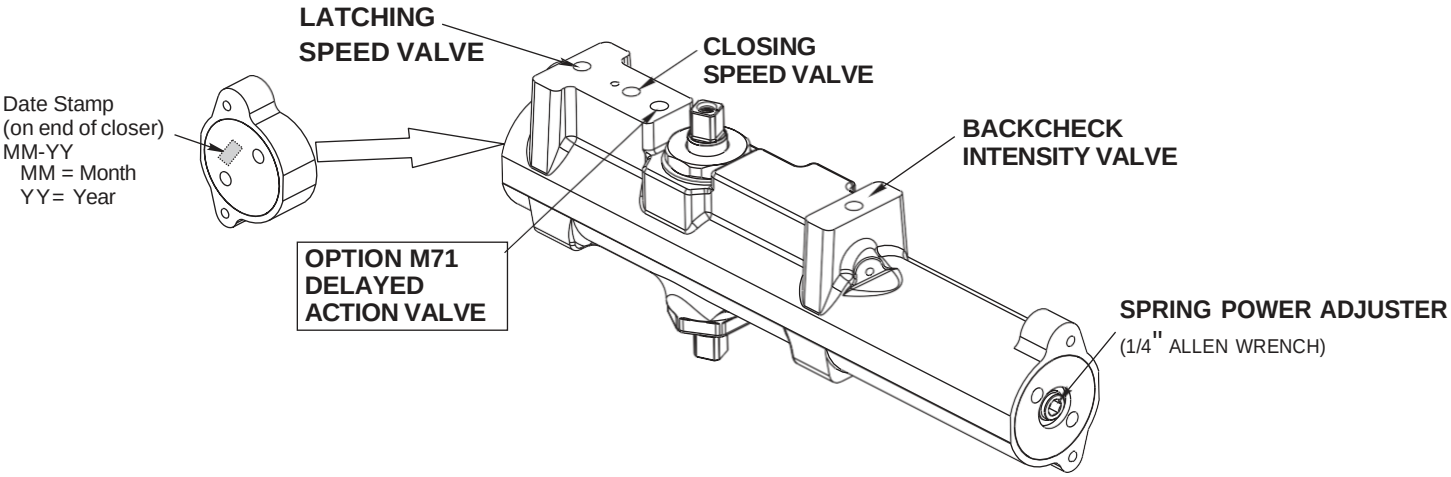

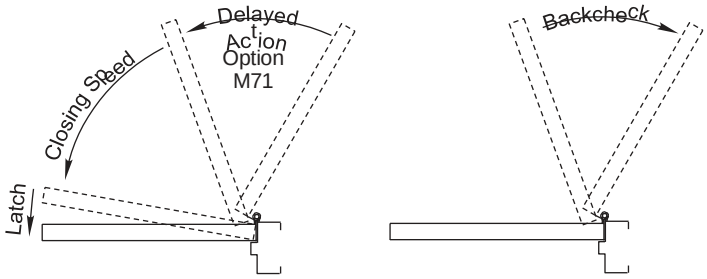

Closing Speed Valve (1/8 Allen Wrench Provided)

To adjust speed of door closing from fully open to a position 2" to 5" from closed, turn Closing Speed Valve CLOCKWISE to SLOW closing, COUNTER-CLOCKWISE to SPEED closing.

Latching Speed Valve (1/8 Allen Wrench Provided)

After closing speed has been obtained, turn latching speed valve CLOCKWISE to SLOW latching or COUNTER-CLOCKWISE to SPEED latching for last 2"to 5"of door travel.

NOTE: Set combination of CLOSING and LATCHING speeds to between3 and 7 seconds Use of door by handicapped, elderly or small children may require even greater closing time.

Backcheck Intensity Valve (1/8 Allen Wrench Provided)

Turn valve COUNTER-CLOCKWISE to reduce backcheck or CLOCKWISE to increase backcheck. (Backcheck should be set to give a soft cushioning action, not a sudden stop.)

Delayed Action Valve (1/8 Allen Wrench Provided)

Turn valve CLOCKWISE to SLOW closing, COUNTER-CLOCKWISE to SPEED closing. Delayed action may be adjusted from 20 seconds to 90 seconds, depending on degree of door swing. Delay occurs at the beginning of the door closing cycle from fully open down to 70°, where the closing speed valve then begins its control.

Installing Cover

- Slip cover over closer.
- Hold tightly against QUIK-INSTALL® Bracket surface.
- Secure on each side with 6-32 x 1/4" PBHMS screws.

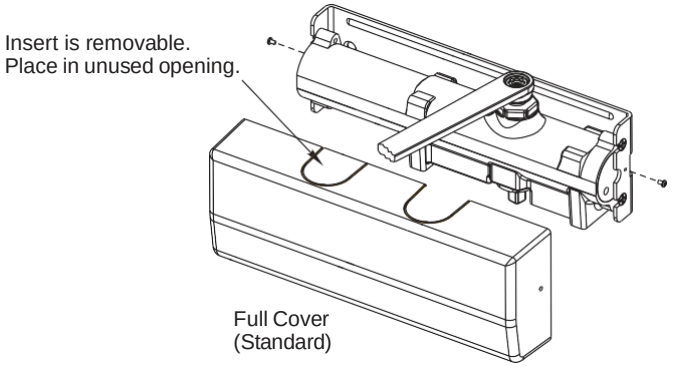

Corbin Russwin®
ASSA ABLOY

80-9380-8004-152 **Rev. 07/09**

Copyright © 2006, 2009, Corbin Russwin, Inc., an ASSA ABLOY Group company. All rights reserved. Reproduction in whole or in part without the express written permission of Corbin Russwin, Inc. is prohibited.

ASSA ABLOY is the global leader in door opening solutions, dedicated to satisfying end-user needs for security, safety and convenience.