Norton®

ASSA ABLOY

Installation Instructions

Overhead Concealed
Security Door Closers

Series 7970-B, & 7970-OP
Non-Hold-Open Models

For wood or metal doors 1- ¾" to 2 -1/4" (45-57mm) thick hung in a hollow metal frame

standard butt hinges or offset pivots

CAUTION

An incorrectly installed or improperly adjusted door closer can cause property damage or personal injury. These instructions should be followed to avoid the possibility of misapplication or misadjustment.

Typical Installation

- One track & closer position for all door opening angles
- Easy arm attachment
- Removable Frame Stop Required*-Not Shown

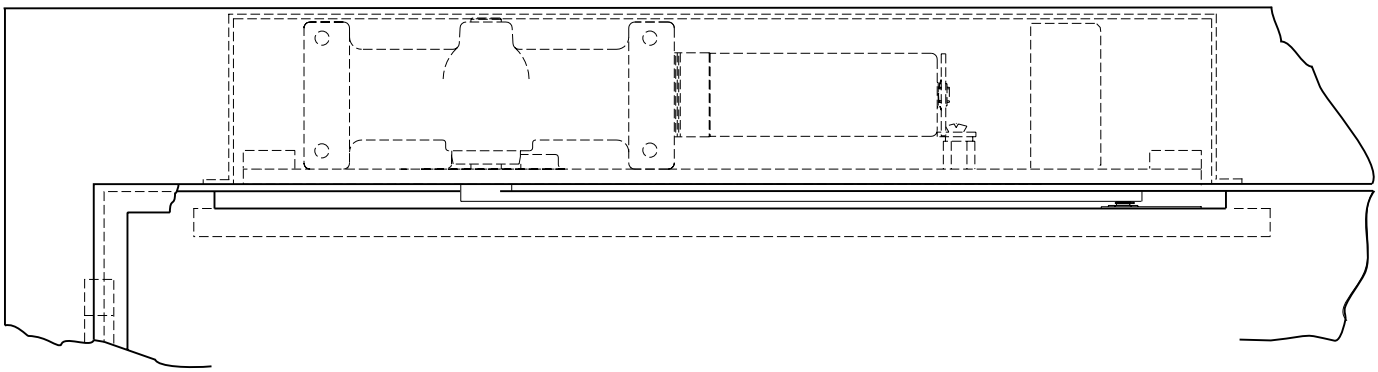

Hinge or
Pivot

Left Hand Door-LH
Right Hand Reverse-RHR

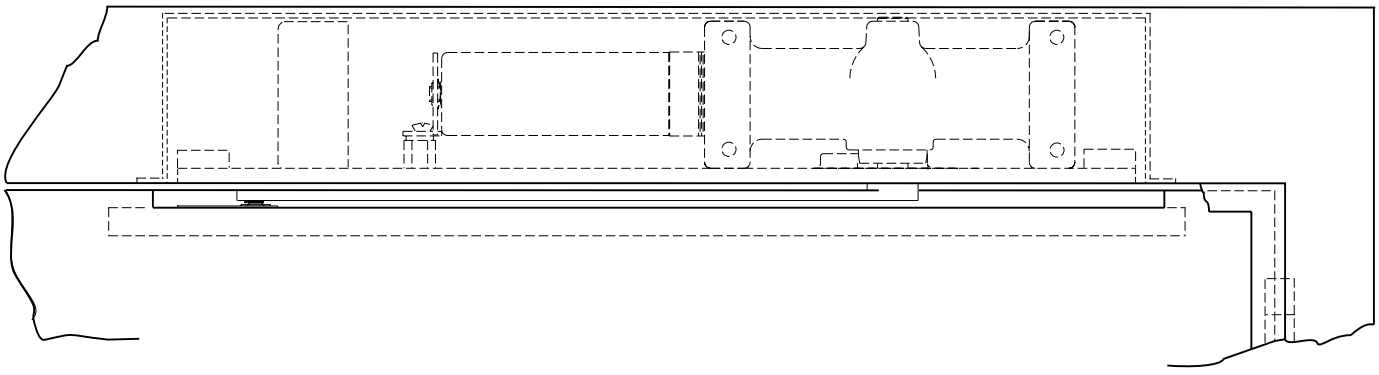

Right Hand Door-RH
Left Hand Reverse-LHR

Hinge or
Pivot

*Not required when frame rabbet exceeds 2-3/16"

Copyright © 2001, 2014 Yale Security Inc., an ASSA ABLOY Group company. All rights reserved.
Reproduction in whole or in part without the express written permission of Yale Security Inc. is prohibited.

Series 7970-B
Non-Hold Open
Overhead Concealed
Security Door Closers

Template-Standard Butt Hinges

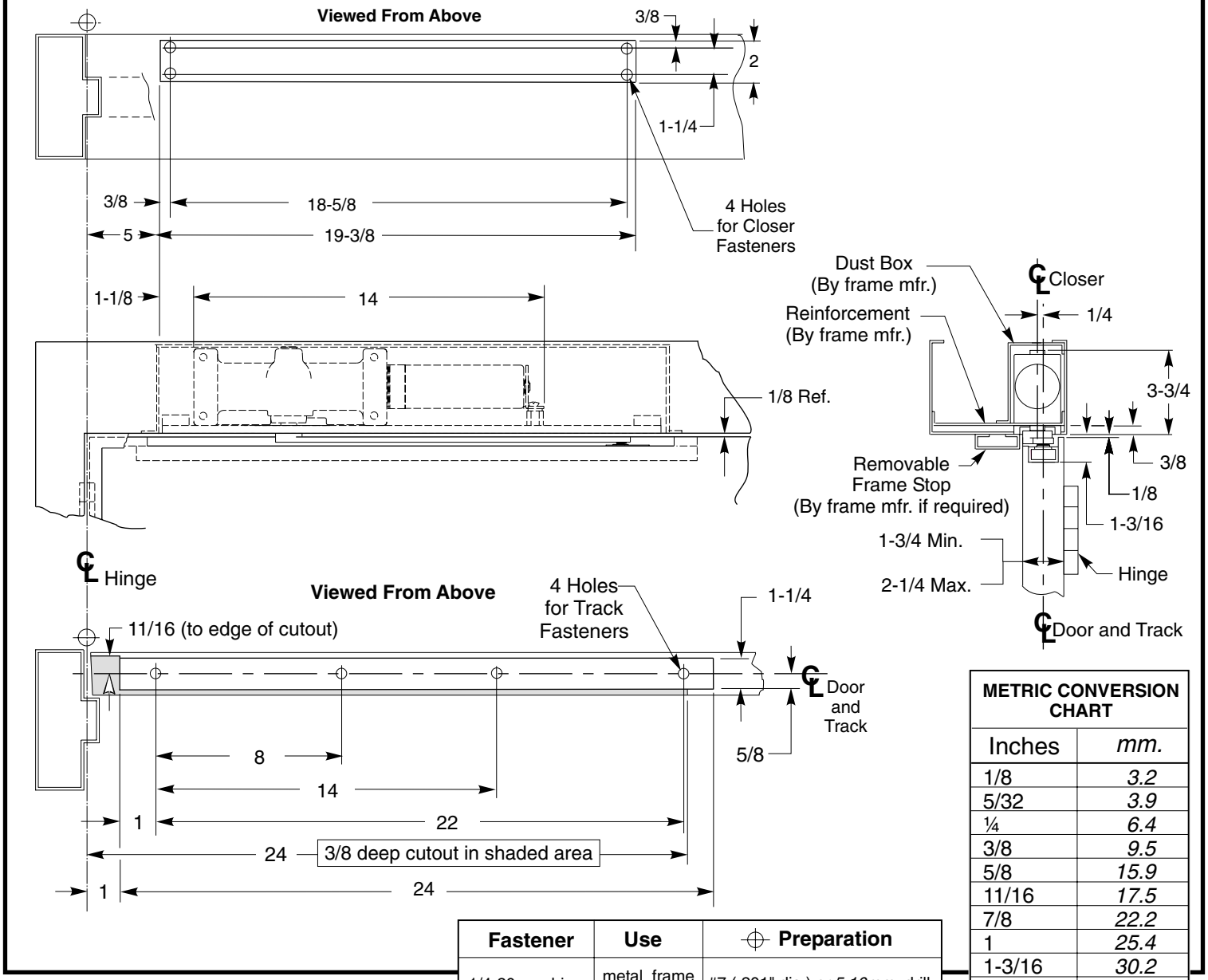

Fastener	Use	Preparation
1/4-20 machine screw	metal frame and metal door	#7 (.201" dia.) or *5.10mm*. drill 1/4-20 tap
#14 wood screw	wood door	7/32" or *5.5mm.* drill

Track Installation	Door Angle		Auxiliary Door Stop Required
	110º	180º	
Non-Hold Open	With Cushion and stop block	Without Cushion and stop block	Opening greater than 110º

See installation sequence on page 5.

NOTES:

- Do not scale drawing.
- Left hand door shown.
- Hardware dimensions shown (not cutouts).
- Dimensions are in inches (see chart for metric conversion).
- Minimum door width 27 inches.
- Track 24 inches long.
- Maximum width hinge is 5 inches.

METRIC CONVERSION CHART	
Inches	*mm.*
1/8	*3.2*
5/32	*3.9*
¼	*6.4*
3/8	*9.5*
5/8	*15.9*
11/16	*17.5*
7/8	*22.2*
1	*25.4*
1-3/16	*30.2*
1-1/4	*31.8*
1-3/4	*44.5*
2	*50.8*
2-1/4	*57.2*
2-1/2	*63.5*
3-3/4	*95.3*
5	*127.0*
8	*203.2*
14	*355.6*
16-15/16	*430.2*
17	*431.8*
18-5/8	*473.0*
19-3/8	*492.1*
22	*558.8*
24	*609.6*
27	*685.8*

Copyright © 2001, 2014 Yale Security Inc., an ASSA ABLOY Group company. All rights reserved.
Reproduction in whole or in part without the express written permission of Yale Security Inc. is prohibited.

Series 7970-OP
Non-Hold Open
Overhead Concealed
Security Door Closers

Template-Offset Pivots

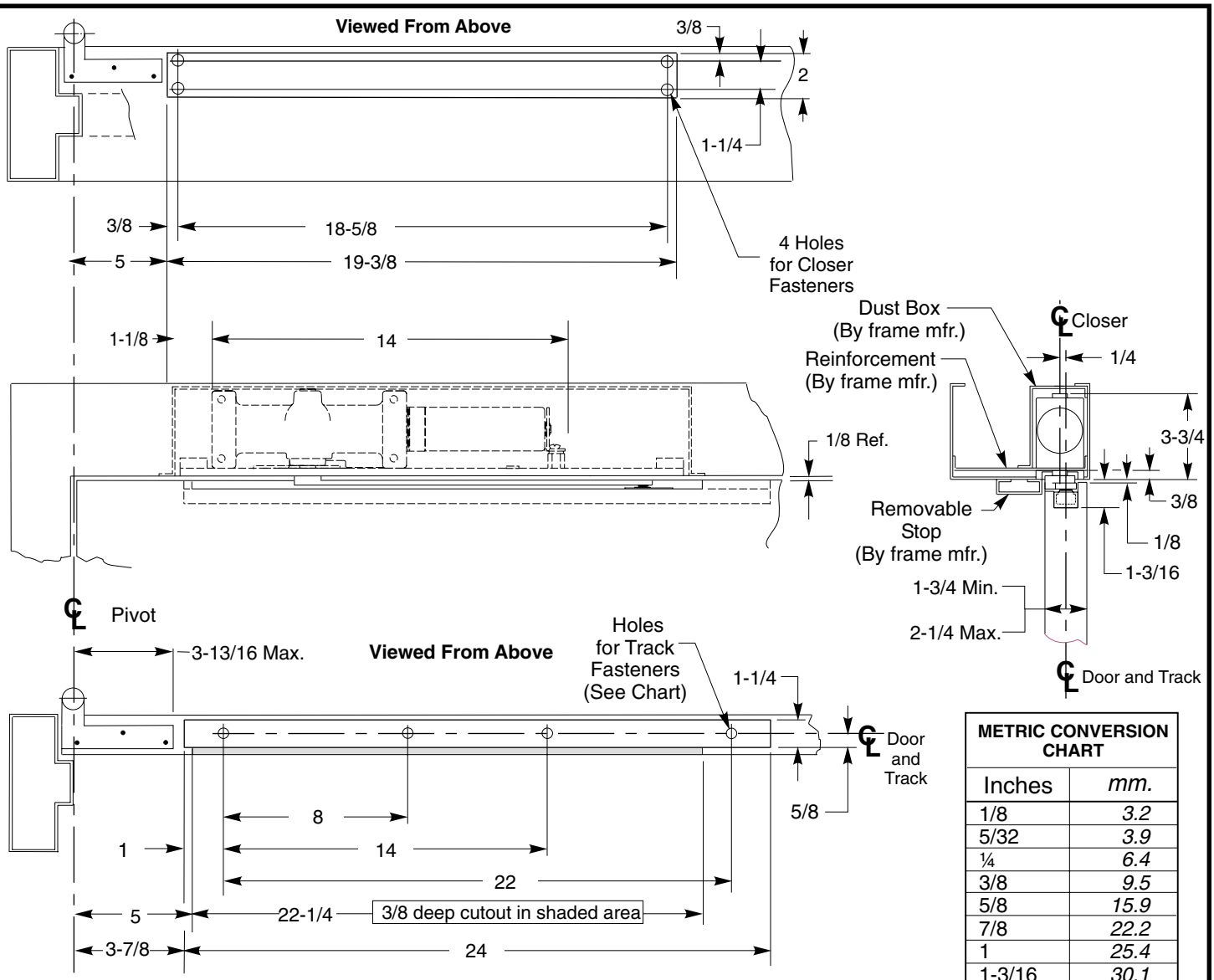

Fastener	Use	⌖ Preparation
1/4-20 machine screw	metal frame and metal door	#7 (.201" dia.) or *5.10mm.* drill 1/4-20 tap
#14 wood screw	wood door	7/32" or *5.5 mm.* drill

METRIC CONVERSION CHART	
Inches	*mm.*
1/8	*3.2*
5/32	*3.9*
¼	*6.4*
3/8	*9.5*
5/8	*15.9*
7/8	*22.2*
1	*25.4*
1-3/16	*30.1*
1-1/4	*31.8*
1-3/4	*44.5*
2	*50.8*
2-1/4	*57.2*
2-1/2	*63.5*
3-3/4	*95.3*
3-13/16	*63.5*
3-7/8	*96.8*
5	*127.0*
8	*203.2*
14	*355.6*
16-15/16	*430.2*
17	*431.8*
18-5/8	*473.0*
19-3/8	*492.1*
22	*558.8*
22-1/4	*565.1*
24	*609.6*
29	*736.6*

NOTES:

- Do not scale drawing.
- Left hand door shown.
- Hardware dimensions shown (not cutouts).
- Dimensions are in inches (see chart for metric conversion).
- Maximum door swing is 95 degrees. Auxiliary door stop(not supplied) is required for this application.
- Standard track is 24” long.
- For doors less than 29” wide, contact factory for modification requirements.

See installation sequence on page 5.

Copyright © 2001, 2014 Yale Security Inc., an ASSA ABLOY Group company. All rights reserved.
Reproduction in whole or in part without the express written permission of Yale Security Inc. is prohibited.

Installation Sequence

- Determine hand of door from illustration on page 1. Closers are handed. Hand of closer must match hand of door.
- Using template dimensions on page 2, or 3, locate & prepare holes and cutout in frame and door.

  Door:
  Prepare door for track. Prepare (4) holes for 1/4-20 machine screws.

  Frame:
  Prepare the frame for mounting closer. Drill and tap (4) holes for 1/4-20 machine screws.

  Note: Generally on new construction hardware cutouts are made by suppliers at their shop.

- **Mount closer to frame.**
  Position spring tube away from hinge or pivot and mounting plate flush with frame rabbet. Secure with mounting screws.
- **Install arm on closer pinion** (see illustration below). Position arm counterbore facing down with index mark aligned with pinion index mark. Install onto pinion. Secure with washer and 1/4-20 x 3/4”long flat head torx drive arm screw with red threadlock.

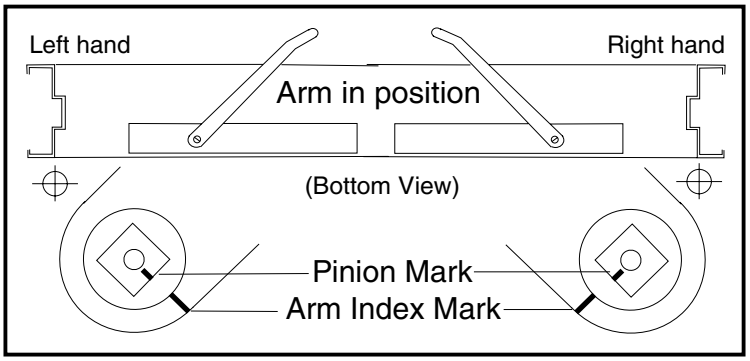

- **Install track in door.**
  Place the assembled track into door cutout with open side up, cushion and stop block toward the hinge or pivot. Move slider to the opposite end of track (see illustration). Secure track with (4) 1/4-20 machine screws.
- **Connect arm to track**. Open door to approximately 5: (127mm), rotate arm to slider and place end on stud. Use a screw driver to align the square on slider’s stud with the arm square (see illustration to right). Push down on arm to seat stud and to prevent stud from rotating. Secure with arm screw, 1/4-20 x 3/4” long flat head torx drive with red threadlock.
- **Determine door opening angle.**
  See pages 2, 3 & 4.
- **Set door opening angle.** Open door to the angle you want the door to stop. With the door held at that location, slide cushion and stop block against slider. Tighten the stop position screw (large set screw) with 3/16" hex wrench (from screw pack) until secure. Release door.
- **Adjust closer.**See page 6....Install dress plate.

Copyright © 2001, 2014 Yale Security Inc., an ASSA ABLOY Group company. All rights reserved.
Reproduction in whole or in part without the express written permission of Yale Security Inc. is prohibited.

ASSA ABLOY, the global leader in door opening solutions
80-9379-1701-020 (06-14)

Assembly Components

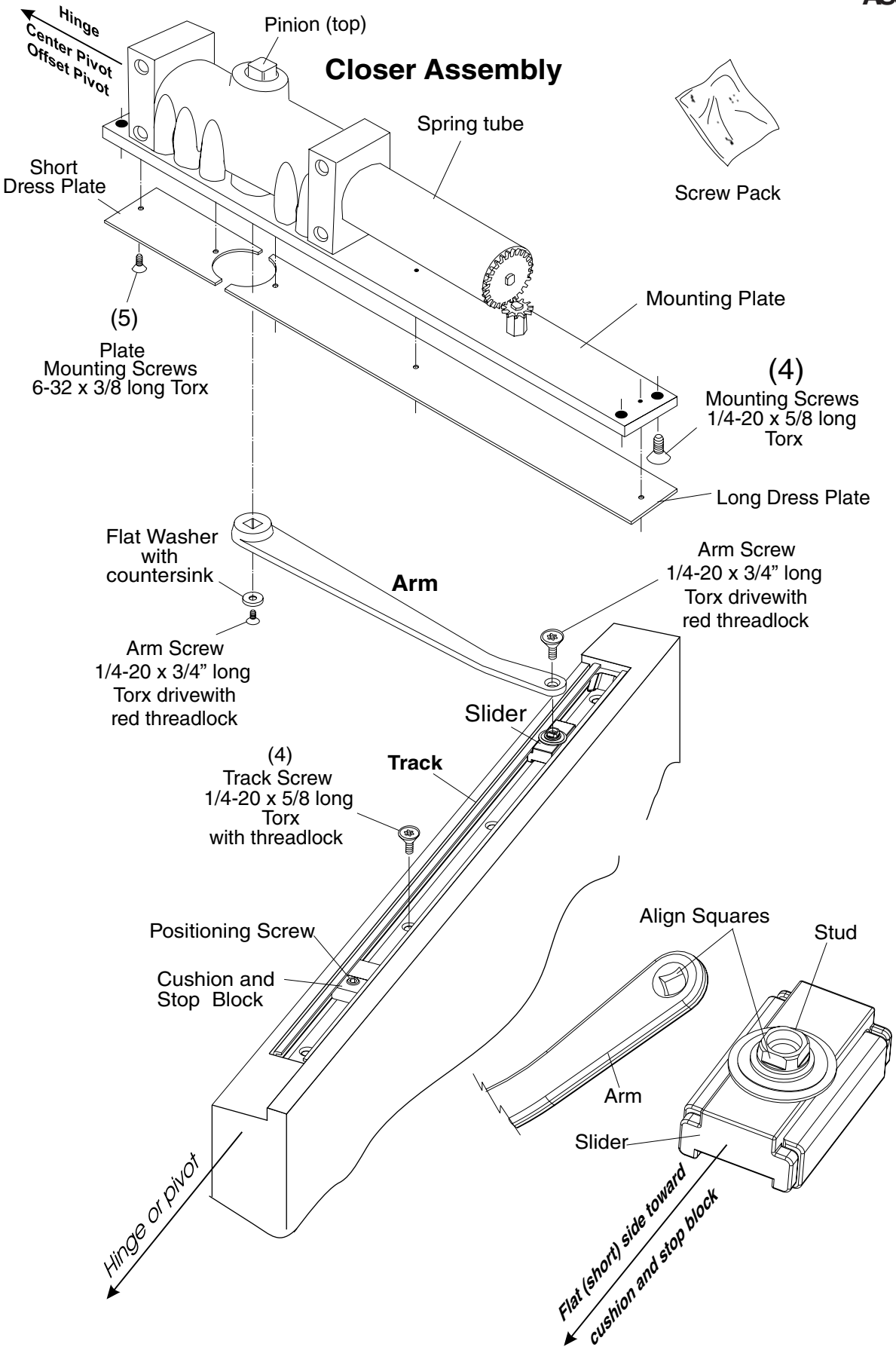

Copyright © 2001, 2014 Yale Security Inc., an ASSA ABLOY Group company. All rights reserved.
Reproduction in whole or in part without the express written permission of Yale Security Inc. is prohibited.

Closer Adjustment

Series 7970-B & 7970-OP
Non-Hold Open
Overhead Concealed
Security Door Closers

CAUTION:
Do not back valves out of closer or a leak will result.

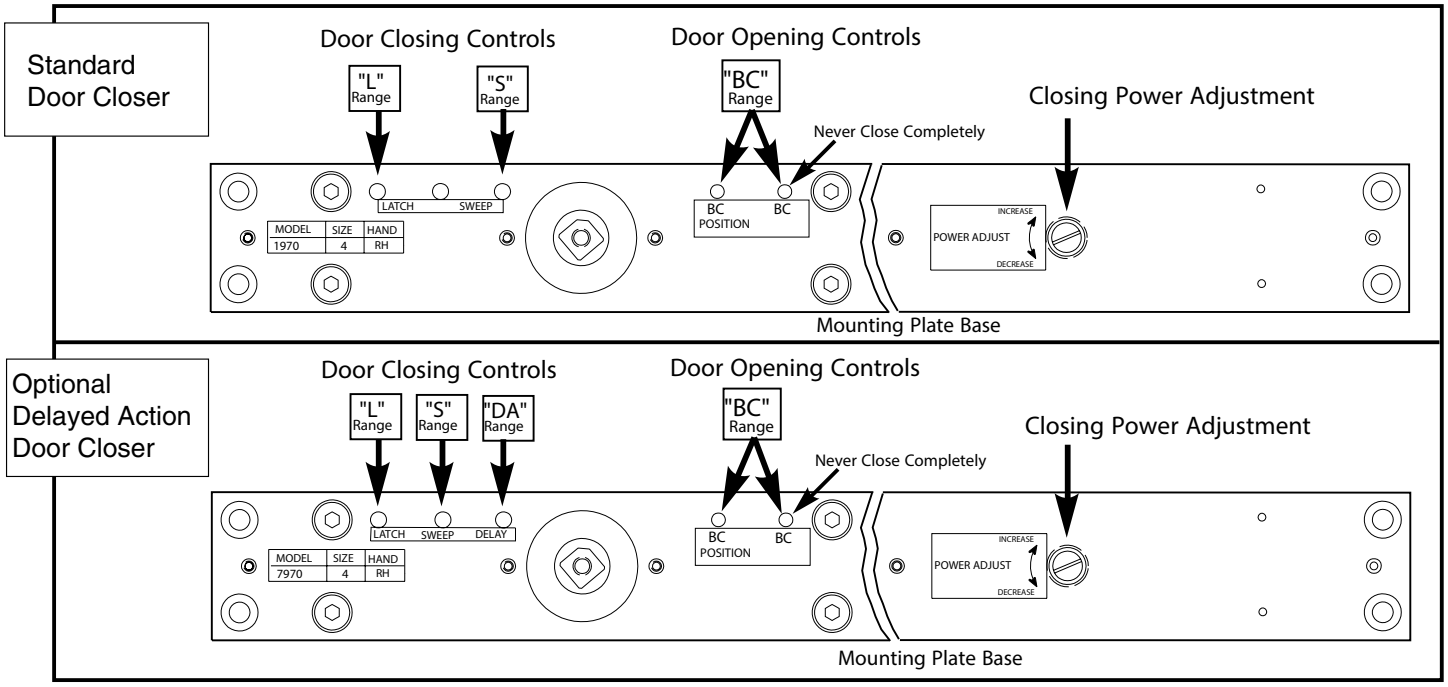

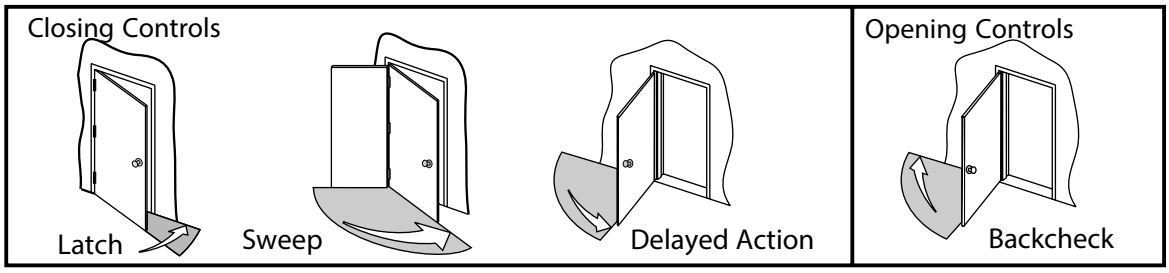

- **Closer Controls** accessible through mounting plate for closer adustment:
  Use 1/8" (3mm.) hex-key for valve adjustments.
  Use standard screwdriver for power adjustment.
- **Power Adjustment** permits increasing door closing force.
  Controlled by slotted screw marked *"P.A."*
- **Closing Speed** controlled by valves marked *"SWEEP"* and *"LATCH"*
  Attention: Adjust closing speed time to between 4 to 7 seconds from 90°.
  Use of the door by handicapped, elderly, or small children may require greater closing time.
- **Delayed Action** option permits door to creep from fully open to about 70°. Creeping time controlled by valve marked "DELAY".
- **Backcheck** cushions or slows the opening of a door that is forced to travel faster than conditions require.
  Backcheck controlled by valves marked *"BC POSITION"* (open for backcheck start at a greater door opening angle) and *"BC"* (for adjusting backcheck intensity). Never close *"BC"* valve completely.
- **Optional Enhanced Backcheck** provides adjustable backcheck intensity beginning at approximately 15° of the door opening cycle. Backcheck positioning valve is omitted when this feature is provided.
- **Install Dress Plates** (see page 5).

Norton
ASSA ABLOY
3000 Highway 74 East • Monroe, NC 28112
Tel: (877)-974-2255 • Fax: (800)-338-0965
www.nortondoorcontrols.com

Copyright © 2001, 2014 Yale Security Inc., an ASSA ABLOY Group company. All rights reserved.
Reproduction in whole or in part without the express written permission of Yale Security Inc. is prohibited.

ASSA ABLOY, the global leader in door opening solutions

80-9379-1701-020 (06-14)