Norton®

ASSA ABLOY

Installation Instructions

Overhead Concealed
Security Door Closers
with Door Position Switch

Series 7970DPS-B, & 7970DPS-OP
Non-Hold-Open Models

For wood or metal doors 1- ¾" to 2 -1/4" (45-57mm) thick hung in a hollow metal frame

standard butt hinges or offset pivots

CAUTION

An incorrectly installed or improperly adjusted door closer can cause property damage or personal injury. These instructions should be followed to avoid the possibility of misapplication or misadjustment.

Typical Installation

- One track & closer position for all door opening angles
- Easy arm attachment
- Removable Frame Stop Required*-Not Shown

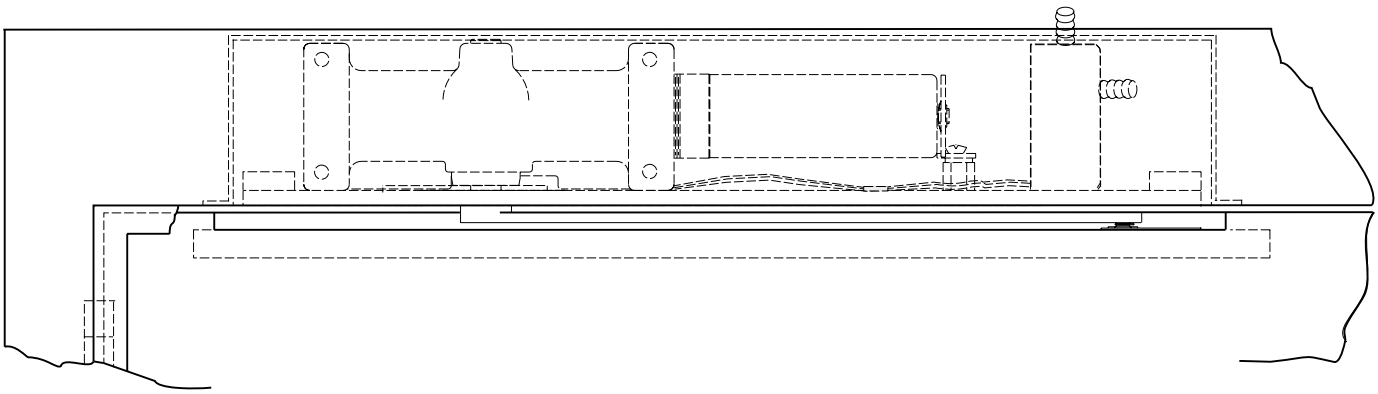

Hinge or
Pivot

Left Hand Door-LH
Right Hand Reverse-RHR

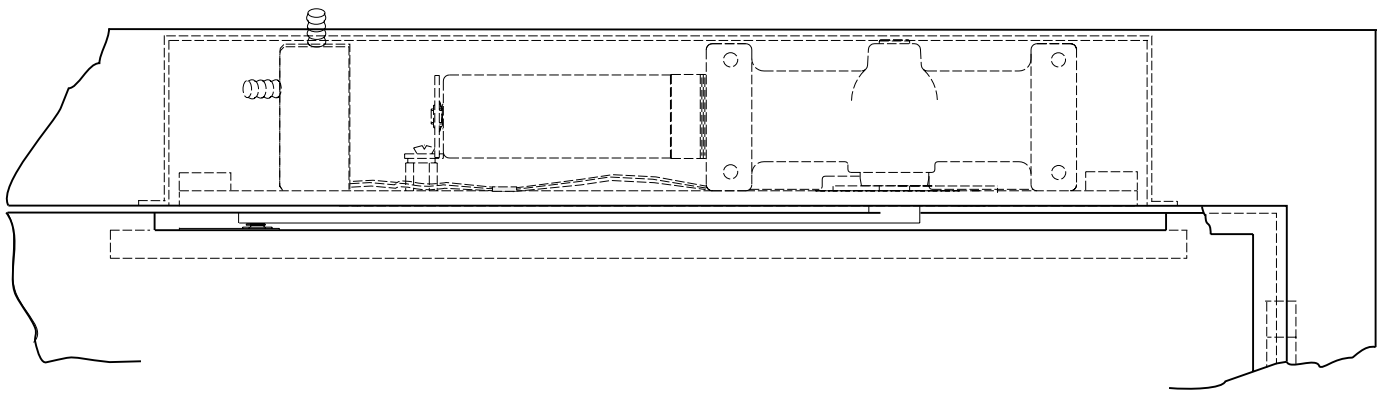

Right Hand Door-RH
Left Hand Reverse-LHR

Hinge or
Pivot

*Not required when frame rabbet exceeds 2-3/16"

Copyright © 2001, 2014 Yale Security Inc., an ASSA ABLOY Group company. All rights reserved.
Reproduction in whole or in part without the express written permission of Yale Security Inc. is prohibited.

Series 7970DPS-B Non-Hold Open
Overhead Concealed
Security Door Closers
With Door Position Switch

Template-Standard Butt Hinges

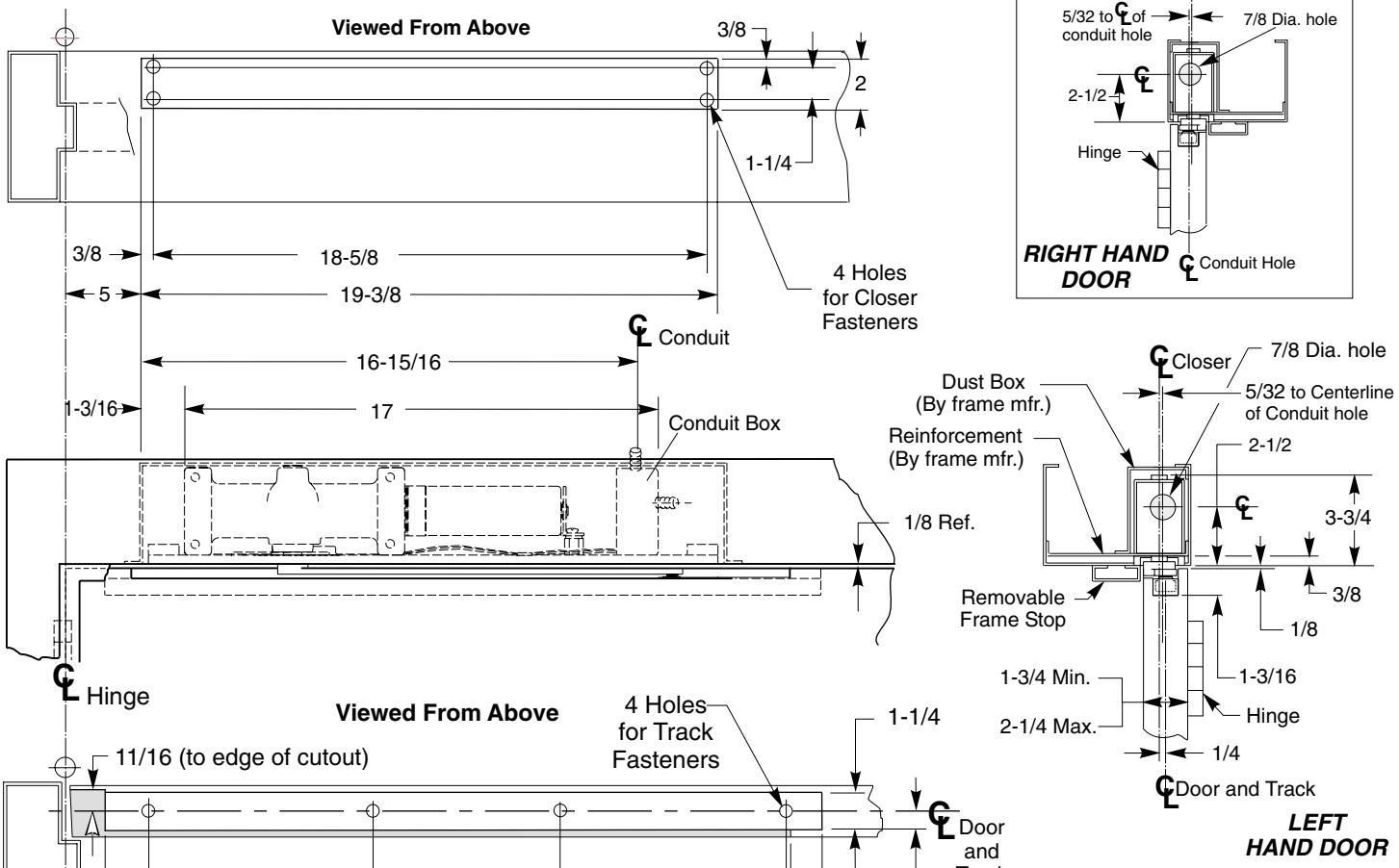

Fastener	Use	Preparation
1/4-20 machine screw	metal frame and metal door	#7 (.201" dia.) or *5.10mm.* drill 1/4-20 tap
#14 wood screw	wood door	7/32" or *5.5mm.* drill

Track Installation	Door Angle		Auxiliary Door Stop Required
	110º	180º	
Non-Hold Open	With Cushion and stop block	Without Cushion and Stop block	Opening greater than 110º

NOTES:

- Do not scale drawing.
- Left hand door shown.
- Hardware dimensions shown (not cutouts).
- Dimensions are in inches (see chart for metric conversion).
- Minimum door width 27 inches..
- Track 24 inches long.
- Maximum width hinge is 5 inches.

See installation sequence on page 5.

METRIC CONVERSION CHART	
Inches	*mm.*
1/8	*3.2*
1/4	*6.4*
3/8	*9.5*
5/8	*15.9*
11/16	*17.5*
1	*25.4*
1-3/16	*30.2*
1-1/4	*31.8*
1-3/4	*44.5*
2	*50.8*
2-1/4	*57.2*
3-3/4	*95.3*
5	*127.0*
8	*203.2*
14	*355.6*
18-5/8	*473.0*
19-3/8	*492.1*
22	*558.8*
24	*609.6*
27	*685.8*

Copyright © 2001, 2014 Yale Security Inc., an ASSA ABLOY Group company. All rights reserved.
Reproduction in whole or in part without the express written permission of Yale Security Inc. is prohibited.

Series 7970DPS-OP Non-Hold Open
Overhead Concealed
Security Door Closers
With Door Position Switch

Template-Offset Pivots

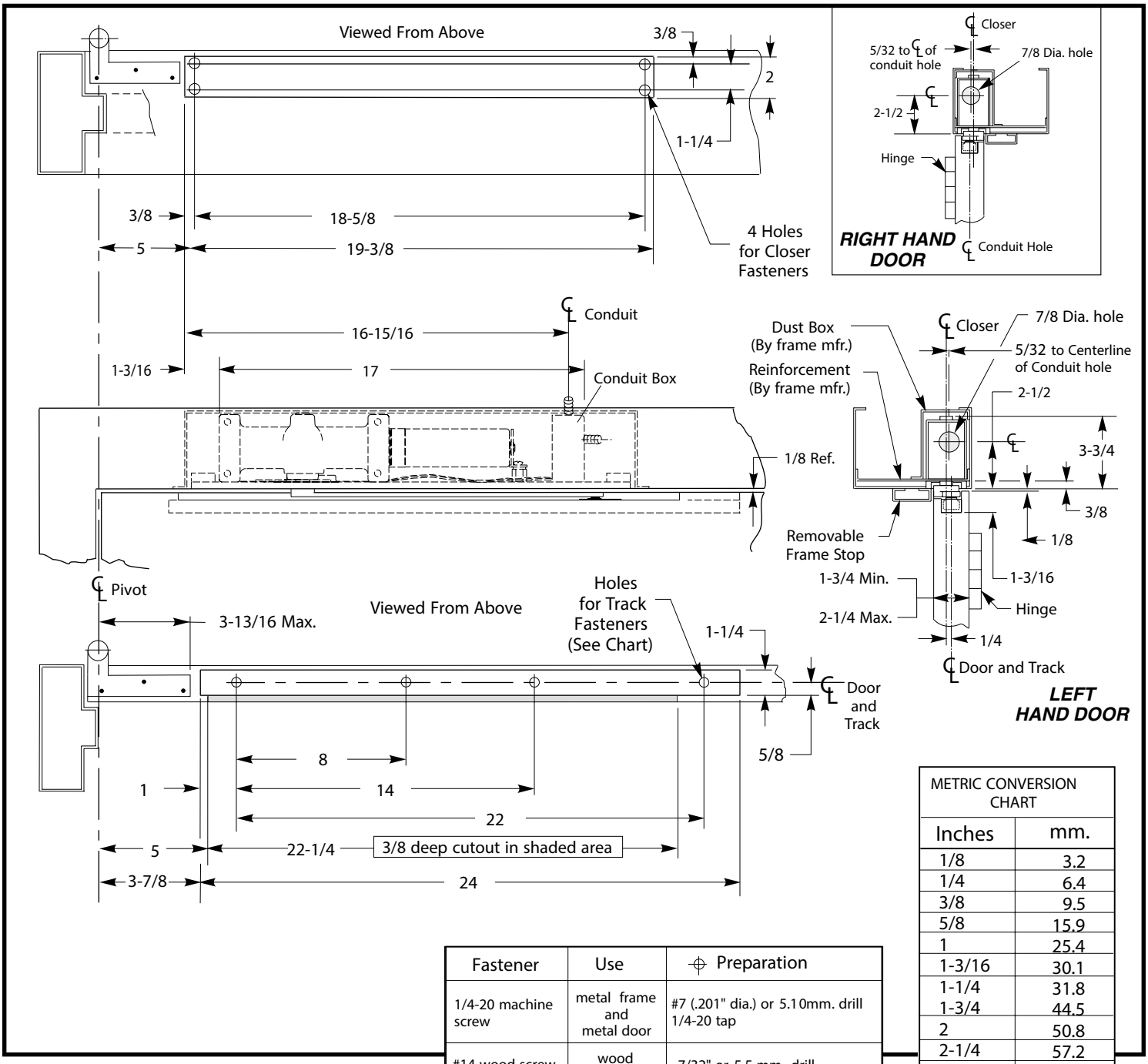

Fastener	Use	⌖ Preparation
1/4-20 machine screw	metal frame and metal door	#7 (.201" dia.) or 5.10mm. drill 1/4-20 tap
#14 wood screw	wood door	7/32" or 5.5 mm. drill

METRIC CONVERSION CHART	
Inches	mm.
1/8	3.2
1/4	6.4
3/8	9.5
5/8	15.9
1	25.4
1-3/16	30.1
1-1/4	31.8
1-3/4	44.5
2	50.8
2-1/4	57.2
3-3/4	95.3
3-13/16	96.8
3-7/8	98.4
5	127.0
8	203.2
14	355.6
18-5/8	473.0
19-3/8	492.1
22	558.8
22-1/4	565.1
24	609.6
29	736.6

NOTES:

- Do not scale drawing.
- Left hand door shown.
- Hardware dimensions shown (not cutouts).
- Dimensions are in inches (see chart for metric conversion).
- Maximum door swing is 95 degrees. Auxiliary door stop(not supplied) is required for this application.
- Standard track is 24” long.
- For doors less than 29” wide, contact factory for modification requirements.

See installation sequence on page 5.

Copyright © 2001, 2014 Yale Security Inc., an ASSA ABLOY Group company. All rights reserved.
Reproduction in whole or in part without the express written permission of Yale Security Inc. is prohibited.

Installation Sequence

- **Determine hand of door** from illustration on page 1. Closers are handed. Hand of closer must match hand of door.
- **Using template dimensions** on page 2 or 3, locate & prepare holes and cutouts in frame and door.

Door:
Prepare door for track. Drill and tap (4) holes for 1/4-20 machine screws.

Frame:
Prepare the frame for mounting closer. Drill and tap (4) holes for 1/4-20 machine screws.

Note: *Generally on new construction hardware cutouts are made by suppliers at their shop.*

Wiring

- **Wiring of switch must be in compliance with N.E.C. Class 2 wiring specifications.**
- Remove closer's conduit box cover.
- Anchor conduit to closer's conduit box.
- Make wire connections to terminal strip. Switch is momentary contact single pole double throw.
  a. Red lead from switch is open contact (Open circuit when door is closed).
  b. Black lead from switch is closed contact (Closed circuit when door is closed).
  c. White lead from switch connects to power input.
- Replace conduit box cover.

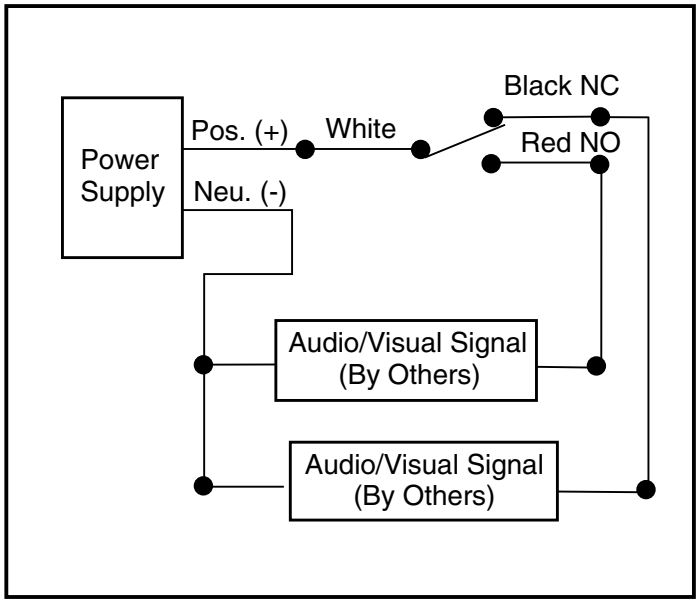

- **Mount closer to frame.** Position spring tube away from hinge or pivot and mounting plate flush with frame rabbet. Secure with 1/4 -20 x 5/8 torx drive mounting screws.
- **Install arm on closer pinion** (see illustration below). Position arm counterbore facing down with index mark aligned with pinion index mark. Install onto pinion. Secure with washer and 1/4-20 x 3/4" long flat head torx drive arm screw with red threadlock.

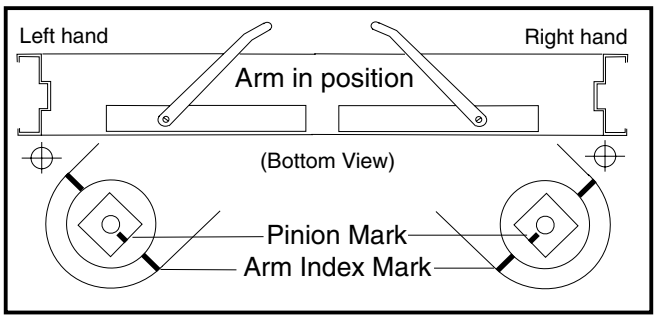

- **Install track in door.** Place the assembled track into door cutout with open side up, cushion and stop block toward the hinge or pivot. Move slider to the opposite end of track (see illustration). Secure track with (4) 1/4-20 machine screws.
- **Connect arm to track**. Open door to approximately 5" (*127mm*), rotate arm to slider and place end on stud. Use a screw driver to align the square on slider's stud with the arm square (see illustration to right). Push down on arm to seat stud and to prevent stud from rotating. Secure with arm screw, 1/4-20 x 3/4" long flat head torx drive with red threadlock.

- **Determine door opening angle.** **See pages 2 & 3.**
- **Set door opening angle.** Open door to the angle you want the door to stop. With the door held at that location, slide cushion and stop block against slider. Tighten the stop position screw (large set screw) with 3/16" hex wrench (from screw pack) until secure. Release door.
- **Adjust Closer.** See page 6...Install dress plates.

Copyright © 2001, 2014 Yale Security Inc., an ASSA ABLOY Group company. All rights reserved.
Reproduction in whole or in part without the express written permission of Yale Security Inc. is prohibited.

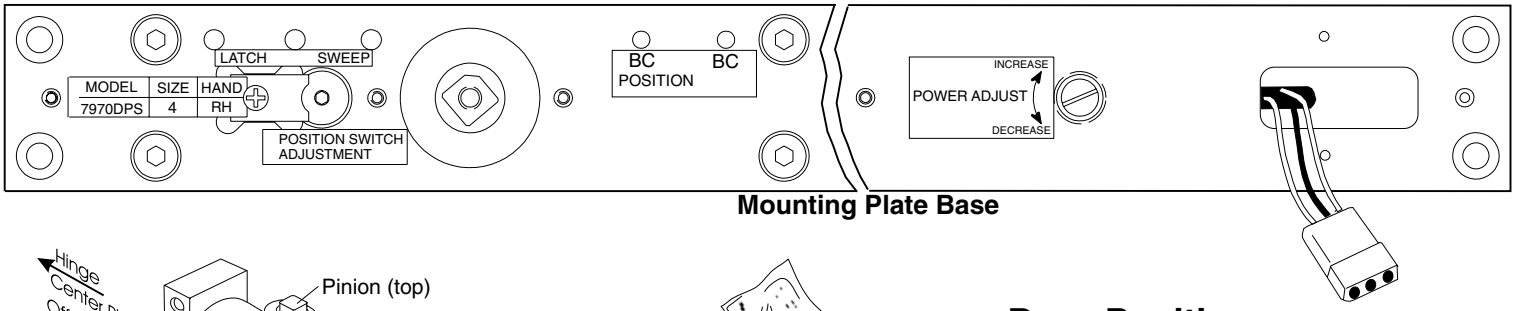

Mounting Plate Base

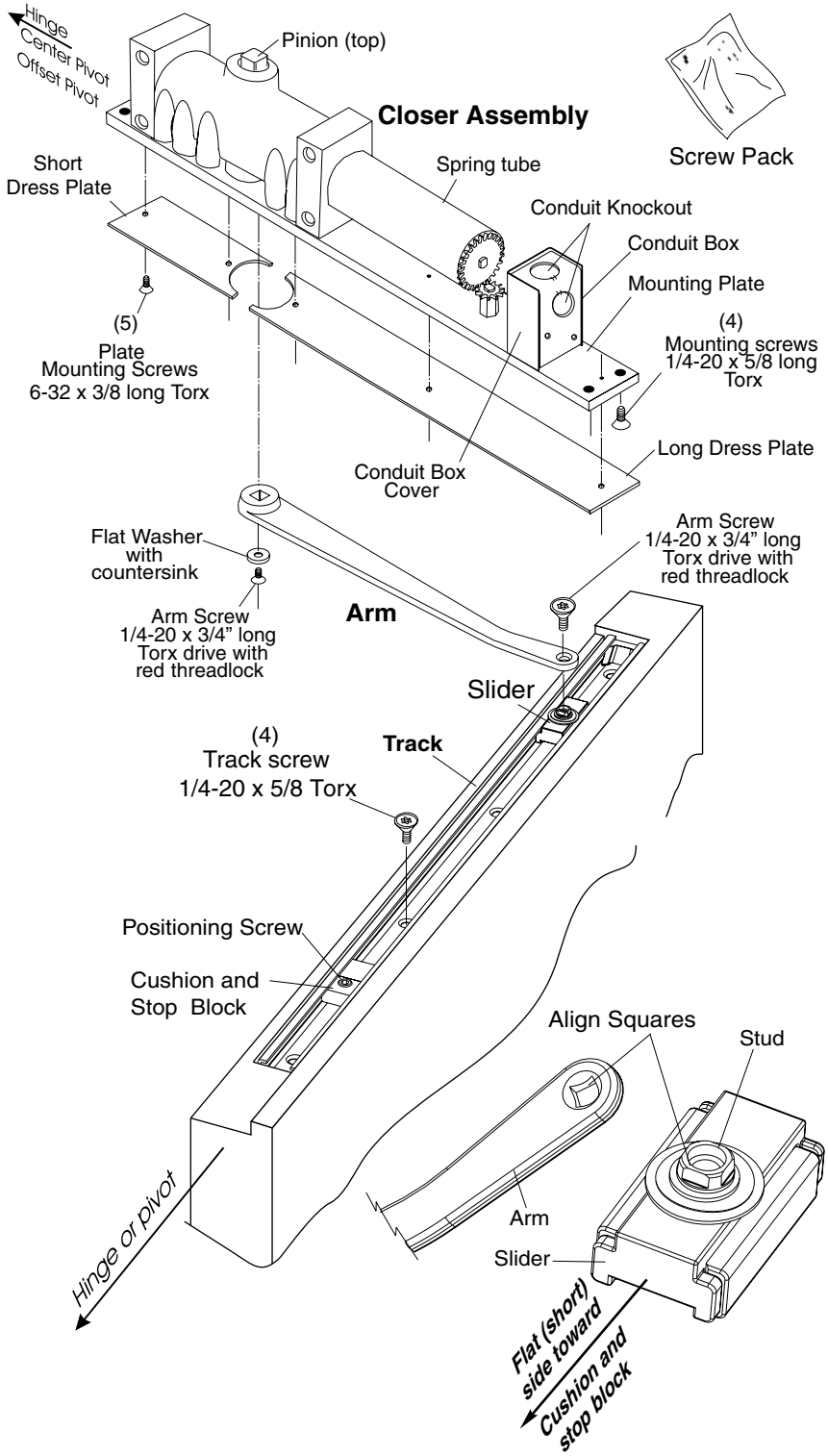

Door Position Switch Adjustment

- Remove tape holding white test socket into slot in base mounting plate. Snap test socket out of recess in plate.
- Close the door, being careful not to pinch test socket or test socket leads.
- Adjustments are made using only slight turning movements of the "Position Switch Adjustment" (Full adjustment range is within a 90° arc).
- **NORMALLY OPEN CIRCUIT** when door is closed: Insert test probes from volt meter into test switch sockets for Red and White leads from closer. **NOW** adjust "Position Switch Adjustment" with a 1/8" (3mm) hex wrench so that power is OFF when door is opened more than 1/4" (7mm).
- **NORMALLY CLOSED CIRCUIT** when door is closed: Insert test probes from volt meter into test switch sockets for Black and White leads from closer. **NOW** adjust "Position Switch Adjustment" with a 1/8" (3mm) hex wrench so that power is ON when door is in the fully closed position but power is OFF when door is opened more than 1/4" (7mm).

Copyright © 2001, 2014 Yale Security Inc., an ASSA ABLOY Group company. All rights reserved.
Reproduction in whole or in part without the express written permission of Yale Security Inc. is prohibited.

Closer Adjustment

Series 7970DPS-B & 7970DPS-OP
Non-Hold Open
Overhead Concealed
Security Door Closers

CAUTION:
Do not back valves out of closer or a leak will result.

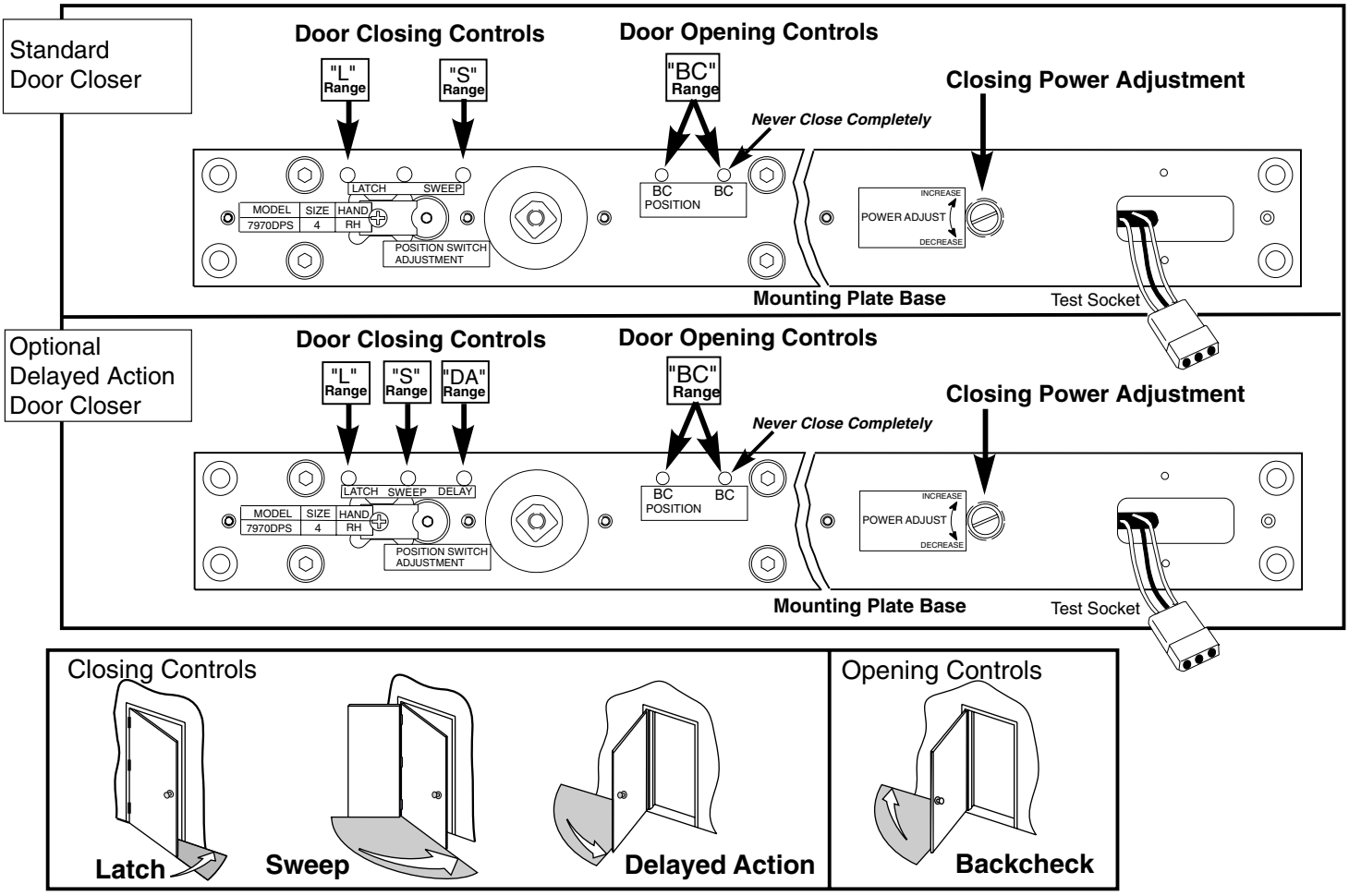

- **Closer Controls** accessible through mounting plate for closer adustment:
  Use 1/8" (3mm.) hex-key for valve adjustments.
  Use standard screwdriver for power adjustment.
- **Power Adjustment** permits increasing door closing force.
  Controlled by slotted screw marked "P.A."
- **Closing Speed** controlled by valves marked *"SWEEP" and "LATCH".*
  Attention: Adjust closing speed time to between 4 to 7 seconds from 90°.
  Use of the door by handicapped, elderly, or small children may require greater closing time.
- **Delayed Action** option permits door to creep from fully open to about 70°. Creeping time controlled by valve marked *"DELAY".*
- **Backcheck** cushions or slows the opening of a door that is forced to travel faster than conditions require.
  Backcheck controlled by valves marked *"BC POSITION"* (open for backcheck start at a greater door opening angle) and *"BC"* (for adjusting backcheck intensity). Never close *"BC"* valve completely.
- **Optional Enhanced Backcheck provides adjustable backcheck intensity beginning at approximately 15° of the door opening cycle. Backcheck positioning valve is omitted when this feature is provided.**
- **Install Dress Plates** (see page 5).

Norton
ASSA ABLOY
3000 Highway 74 East • Monroe, NC 28112
Tel: (877)-974-2255 • Fax: (800)-338-0965
www.nortondoorcontrols.com

Copyright © 2001, 2014 Yale Security Inc., an ASSA ABLOY Group company. All rights reserved.
Reproduction in whole or in part without the express written permission of Yale Security Inc. is prohibited.

ASSA ABLOY, the global leader in door opening solutions

80-9379-1601-020 (06-14)