Norton®

ASSA ABLOY

Installation Instructions

Series 7900/7970 x 790
Non-Hold-Open Models

CAUTION

An incorrectly installed or improperly adjusted door closer can cause property damage or personal injury. These instructions should be followed to avoid the possibility of misapplication or misadjustment.

Fire Block for
Overhead Concealed
Door Closers with
Slide Track

For wood doors 1- ¾" to 2 -1/4" (45-57mm) thick hung in a hollow metal frame

Standard butt hinges and offset pivots
Labelled 20 minute fire door openings

Supplemental sheet for use with Installation Instructions and separate template.

Note:
1. Do not scale drawing
2. Hardware dimensions shown (for cutouts)
3. Dimensions are in inches.
4. This dimension must be taken from separate template provided.

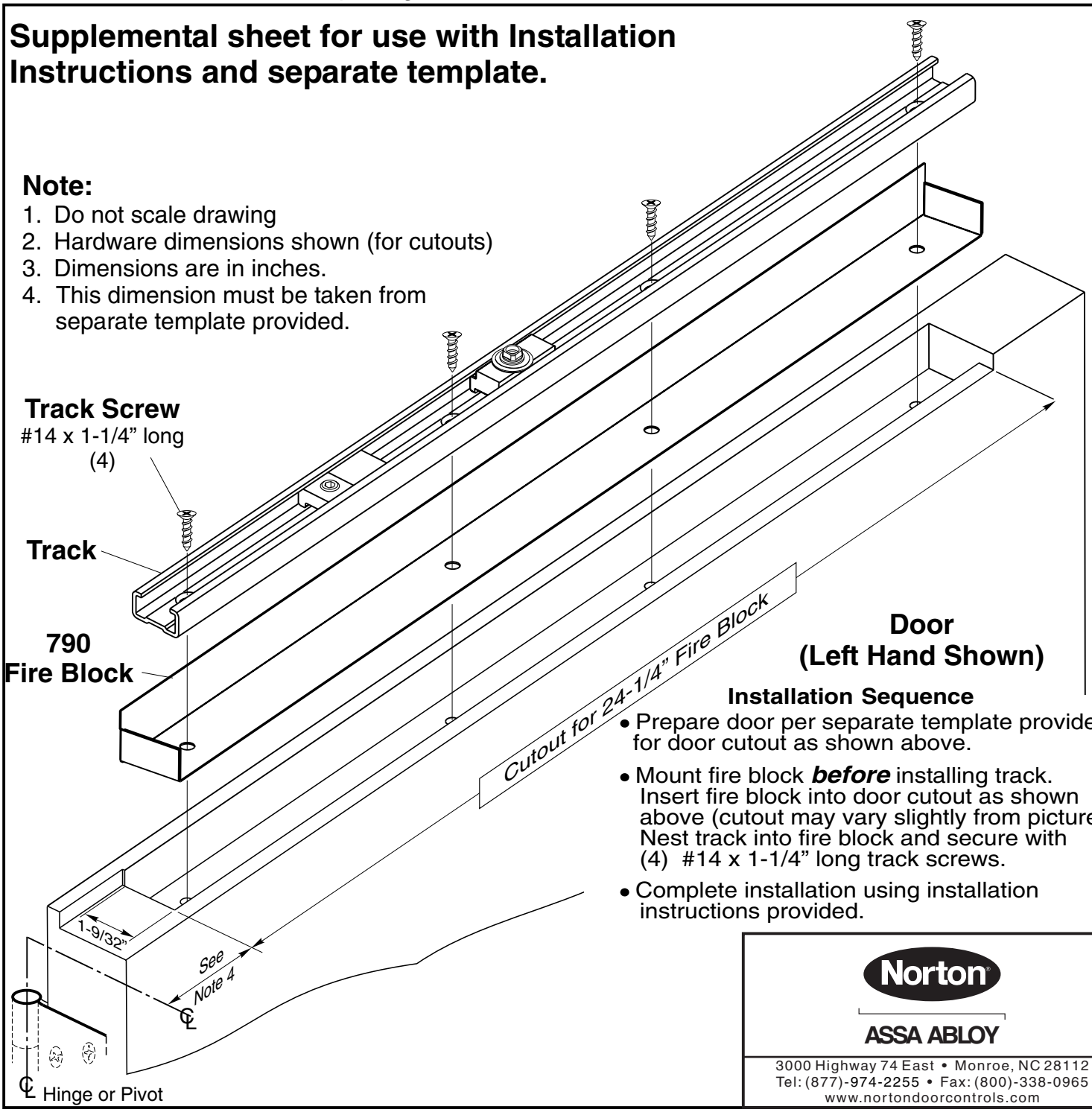

Installation Sequence

- Prepare door per separate template provided for door cutout as shown above.
- Mount fire block ***before*** installing track. Insert fire block into door cutout as shown above (cutout may vary slightly from picture). Nest track into fire block and secure with (4) #14 x 1-1/4" long track screws.
- Complete installation using installation instructions provided.

Norton®
ASSA ABLOY
3000 Highway 74 East • Monroe, NC 28112
Tel: (877)-974-2255 • Fax: (800)-338-0965
www.nortondoorcontrols.com

Copyright © 2001, 2014 Yale Security Inc., an ASSA ABLOY Group company. All rights reserved.
Reproduction in whole or in part without the express written permission of Yale Security Inc. is prohibited.

ASSA ABLOY, the global leader in door opening solutions

80-9379-1202-020 (05-14)