# Installation Instructions

## CloserPlus Ramp™ Door Closers (CLP-R)

**Model Numbers Included:**

| Series | Function | Sizing |
|---|---|---|
| CLP7500R | HO | 1-6 |
| CLP770XR | HO | 2 THRU 6 |

"**X**" Designates closer size 2, 3, 4, 5, or 6

CAUTION An incorrectly installed or improperly adjusted door closer can cause property damage or personal injury. These instructions should be followed to avoid the possibility of misapplication or misadjustment. CAUTION

Additional Closer Options:
- "DA" indicates Delayed Action closing
- "R" indicates Ramp Hold-Open function, not handed

Optional Accessories:
- 7788 Drop Plate
- 2019L, 6890, 6891 Soffit Plate Accessories

NOTE: For special applications a separate door and frame preparation template is packed with these instructions. In those cases, use this instruction sheet for installation sequence and closer adjustments only.

## Standard Frame Installation

Closer mounts on opposite to hinge (push) side of door.

See Pages 3 and 4

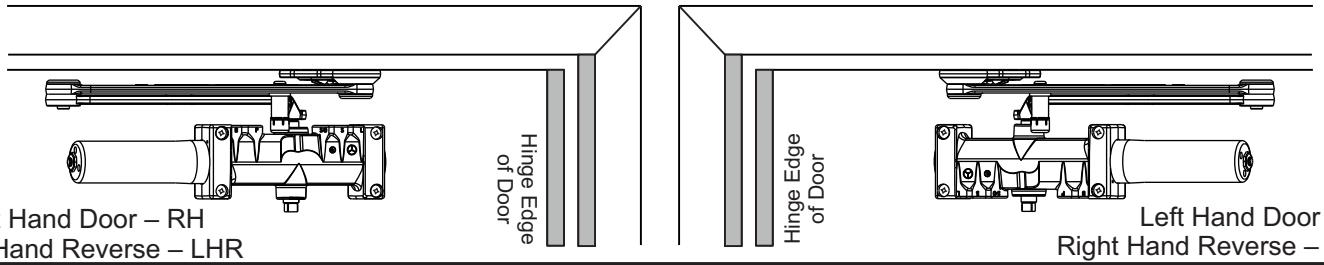


Right Hand Door – RH
Left Hand Reverse – LHR

Left Hand Door – LH
Right Hand Reverse – RHR

## Narrow Frame Installation

Closer mounts on opposite to hinge (push) side of door.
6890 and 6891 accessories required for this application (supplied separately).

See Pages 3 and 4

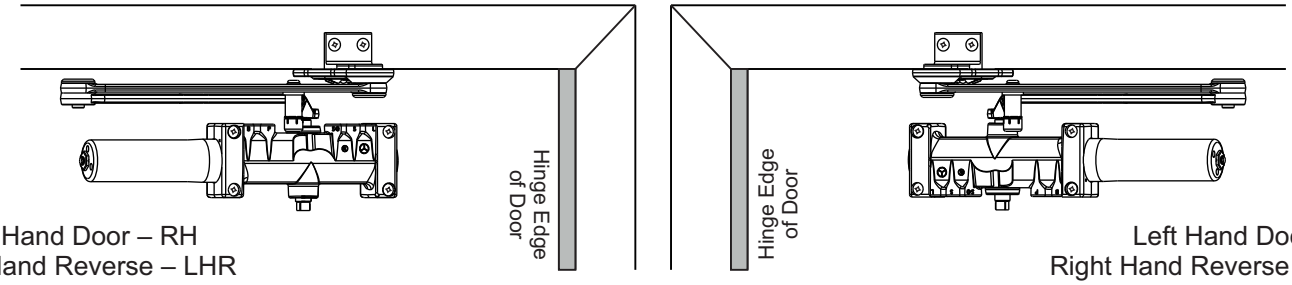


Right Hand Door – RH
Left Hand Reverse – LHR

Left Hand Door – LH
Right Hand Reverse – RHR

## Flush Partition Installation

Closer mounts on opposite to hinge (push) side of door.
2019L accessory required for this application (supplied separately).

See Pages 3 and 5

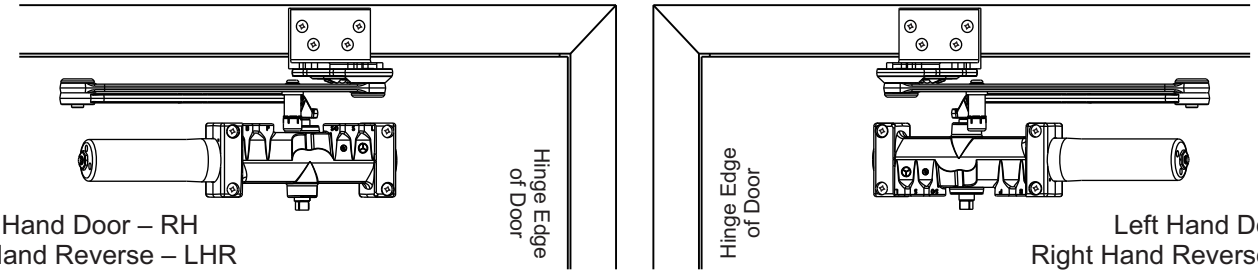


Right Hand Door – RH
Left Hand Reverse – LHR

Left Hand Door – LH
Right Hand Reverse – RHR

Copyright © 2013, 2014 Yale Security Inc., an ASSA ABLOY Group company. All rights reserved.
Reproduction in whole or in part without the express written permission of Yale Security Inc. is prohibited.

## Components

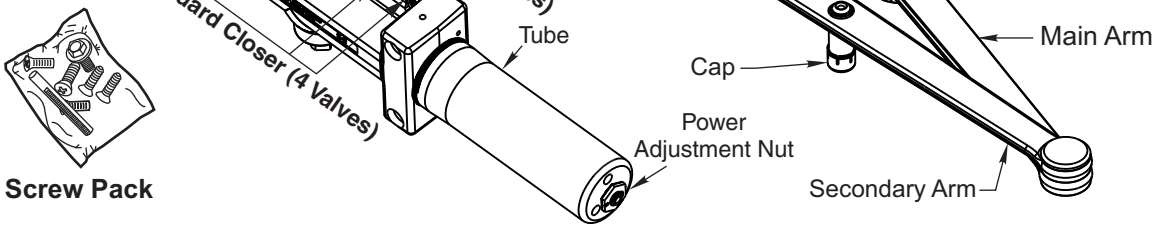


## Optional Accessories

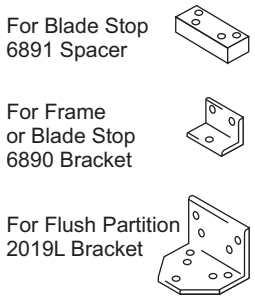


## Cover Options

### Plastic Cover (Standard)

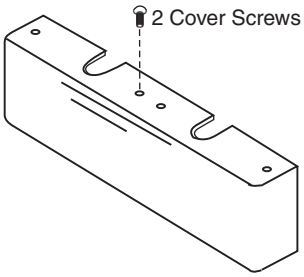


### Metal Cover (Optional)

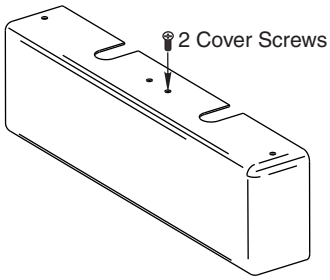


| Preparation for Fasteners | | | |
|---|---|---|---|
| | **Fasteners** | **Door or Frame** | **Drill-Sizes** |
| **Standard** | Self-Drilling Screw | Aluminum or Metal | No drill required |
| | | Wood | 3/16" (4.80 mm) Pilot hole required |
| | 1/4" - 20 machine screw | Metal | Drill: #7 (0.201" dia.)(5mm) Tap: 1/4" - 20 |
| **Optional** | Sleeve nuts and bolts | Hollow Metal | 9/32" (7 mm) thru; 3/8" (9.5 mm) door face opposite to closer |
| | | Aluminum or Wood | 3/8" (9.5 mm) through |
| | Through-bolts and grommet-nuts | All | 9/32" (7 mm) thru; 3/8" (9.5 mm) dia. x 3/8" (9.5 mm) deep on door opposite to closer |

**Note:** Wood doors **MUST** be pre-drilled when using Self-Drilling Screws.

Copyright © 2013, 2014 Yale Security Inc., an ASSA ABLOY Group company. All rights reserved.
Reproduction in whole or in part without the express written permission of Yale Security Inc. is prohibited.

## Installation Instructions

- Select angle of opening and use dimensions shown on Page 4 and Dimension Chart below to locate 4 holes on door for closer body (or 4 holes for 7788 Drop Plate, Page 6, only if required) and 5 holes on stop/rabbet for Soffit Plate (or 4 holes on frame transom for 2019L bracket, only if required). For applications not covered in these instructions, a separate template will be required.
- Prepare door and frame for fasteners using "Preparation for Fasteners" chart on Page 2.
- Install closer body to door, or 7788 Drop Plate, with power adjustment shaft **away** from hinge edge of door and adjustment valves:
  **Down** for **Left Hand**
  **Up** for **Right Hand**

  *Mount 7788 Drop Plate to door ... only if used (see Page 6).*
- Install Main Arm: Close valves **('S/D'** or **'S')** and **'L'**, then using a wrench, rotate the pinion shaft at least 50° to permit alignment of the **Pinion Flat** with the proper arm mark:
  **'Z'** for **Left Hand**
  **'Y'** for **Right Hand**
  See below right for illustrations of this procedure.
- Reopen valves ('S/D' or 'S') and 'L', that were closed in previous step.
- With door closed, align soffit plate with holes in frame and fasten to frame with screws. Use 2019S and/or 6891 spacer blocks or 6890 reinforcing bracket as required.
- 7500 Series Closers only:
  Closer is shipped from factory set at mid-range. Using "Power Adjustment" chart below, rotate power adjustment shaft with 1/8" allen wrench supplied: Turn **CLOCKWISE** to **increase** power. Turn **COUNTER-CLOCKWISE** to **decrease** power. See Page 7 for the illustration of this step.
- Make adjustments to closer before installing cover. See Page 7 for closer adjustment instructions.
  **CAUTION: Do Not back valves out of closer body or a fluid leak will result.**
- Install cover.

**Power Adjustment Chart**

| DOOR | Dim | * | MAXIMUM DOOR SIZE 32" (0.81m) | 36" (0.9 m) | 42" (1.1 m) | 48" (1.2 m) |
|---|---|---|---|---|---|---|
| INT | CLP7500 | FULL 360 DEGREE TURNS OF POWER ADJUSTMENT SHAFT | 0 | 3 | 5 | 8 |
| EXT | | | 4 | 6 | 8 | 12 |
| INT | CLP7700 | | 0 | 2 | 5 | 8 |
| EXT | | | 2 | 5 | 8 | 11 |

*17 - 360°, MAXIMUM AVAILABLE

**Installation Dimensions Chart**

| | Dim | Up to 90° | 90°-95° | 95°-100° | 100°-105° | 105°-110° | 110°-115° |
|---|---|---|---|---|---|---|---|
| CLP7500/ CLP770X | A in./(mm) | 10-1/8 (257) | 9-1/4 (235) | 8-5/8 (219) | 7-7/8 (200) | 7-3/8 (187) | 6-3/4 (171) |
| | B in./(mm) | 10-5/8 (270) | 9-3/4 (248) | 9-1/8 (232) | 8-3/8 (213) | 7-7/8 (200) | 7-1/4 (184) |
| | C in./(mm) | 10-3/4 (273) | 9-7/8 (251) | 9-1/4 (235) | 8-1/2 (216) | 8 (203) | 7-3/8 (187) |

## Arm Mounting Detail

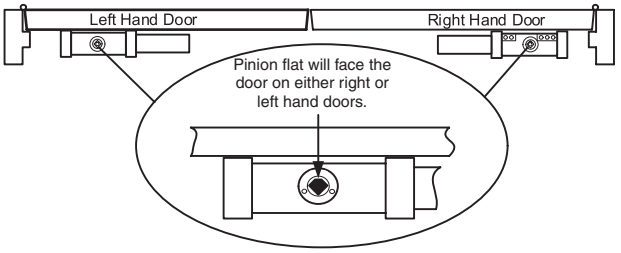


### Arm to Pinion Assembly

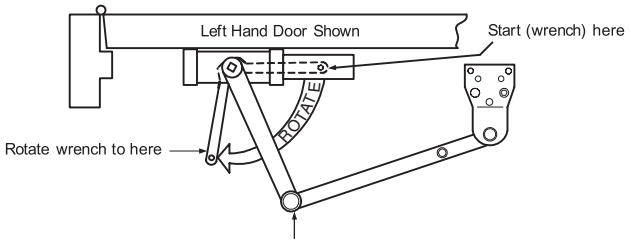


Install arm roughly here with flat side of pinion to the correct marking on the arm per the illustration below

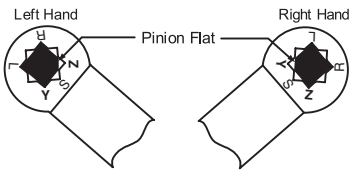


### Final Installation

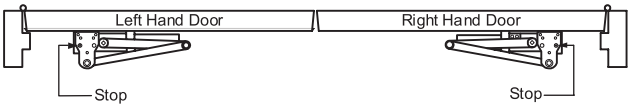


Copyright © 2013, 2014 Yale Security Inc., an ASSA ABLOY Group company. All rights reserved.
Reproduction in whole or in part without the express written permission of Yale Security Inc. is prohibited.

## Standard Frame

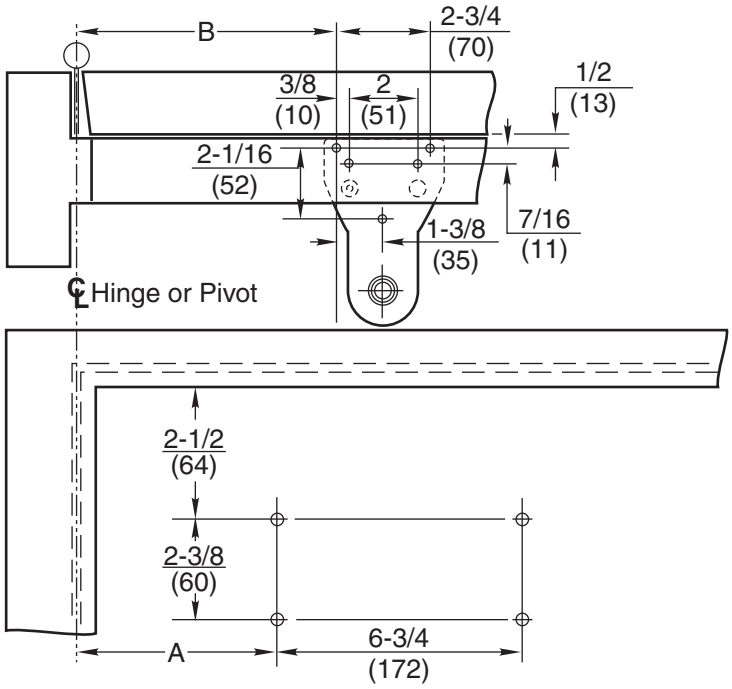


Notes:
Do Not Scale Drawing.
Left Hand Door Shown.
Same dimensions apply for Right Hand Door measured from centerline of pivot point.
Dimensions are in inches (mm).
See Page 3 for A , B, & C dimension values.

**Standard Mount**

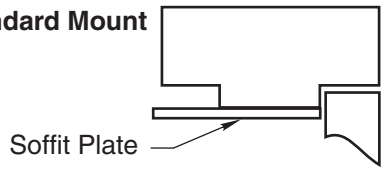


**Blade Stop Mount**

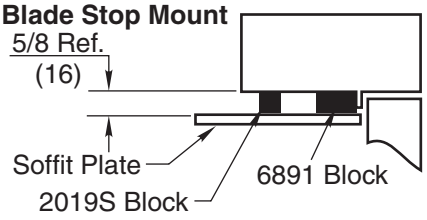


## Narrow Frame

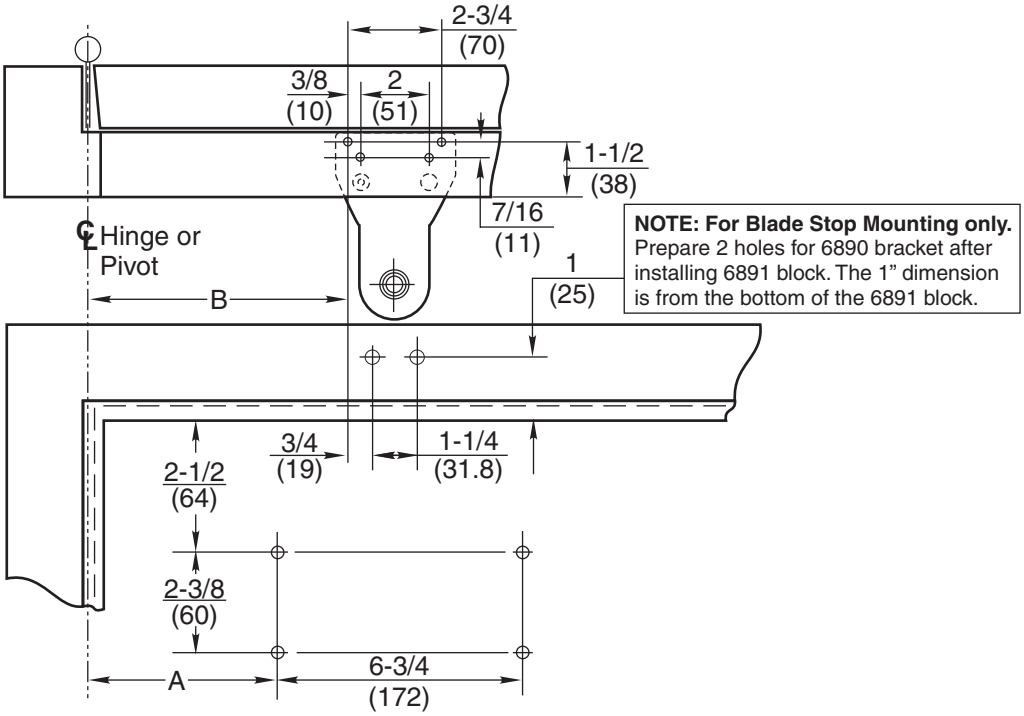


**NOTE: For Blade Stop Mounting only.** Prepare 2 holes for 6890 bracket after installing 6891 block. The 1" dimension is from the bottom of the 6891 block.

**Narrow Frame Mount**

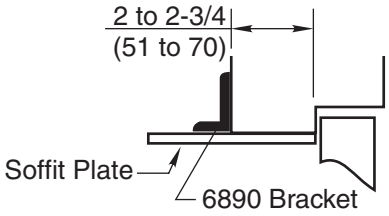


**Blade Stop Mount**

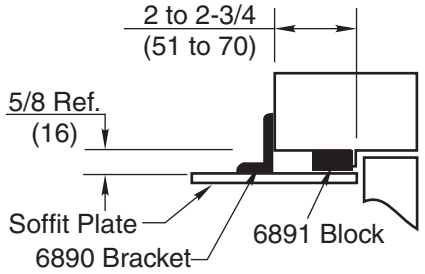


Copyright © 2013, 2014 Yale Security Inc., an ASSA ABLOY Group company. All rights reserved.
Reproduction in whole or in part without the express written permission of Yale Security Inc. is prohibited.

## Flush Partition

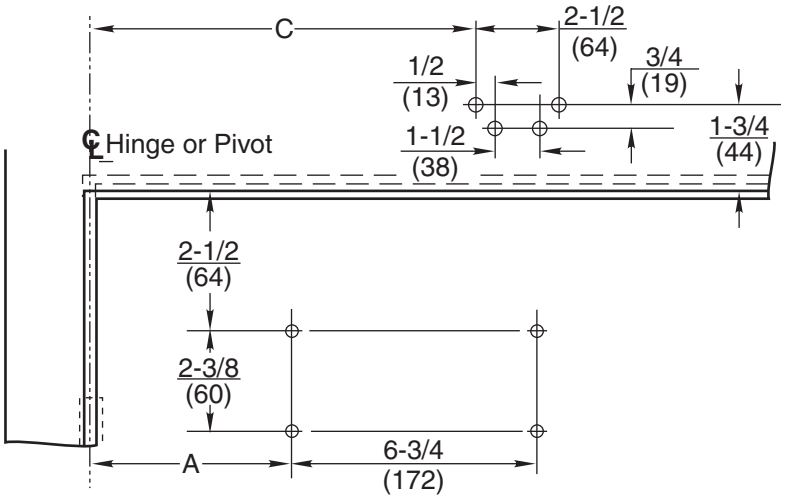


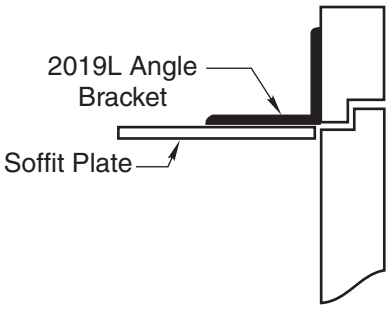


Copyright © 2013, 2014 Yale Security Inc., an ASSA ABLOY Group company. All rights reserved.
Reproduction in whole or in part without the express written permission of Yale Security Inc. is prohibited.

# 7788 Drop Plate Mounting Holes

Notes:
Left Hand Door Shown.
Same dimensions apply for Right Hand
Door measured from centerline of pivot point.
Dimensions are in inches (mm).
See Chart below for D dimension values.

Norton
ASSA ABLOY

## Standard Frame

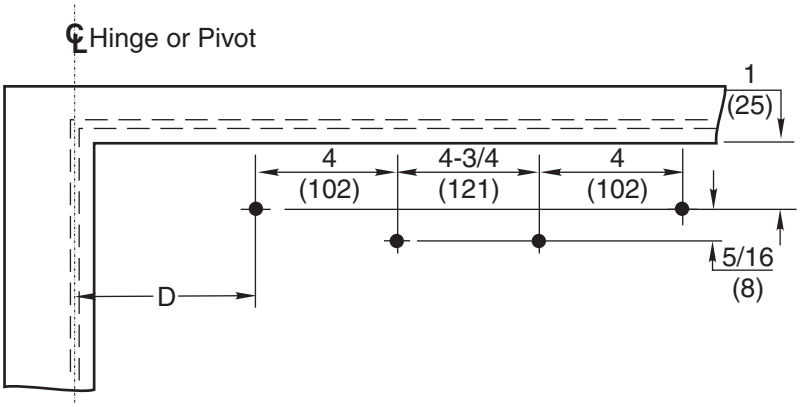


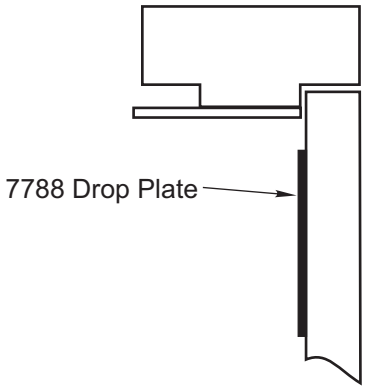


## Narrow Frame

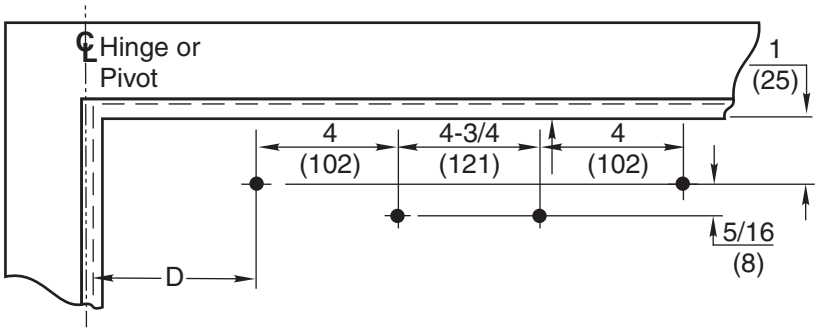


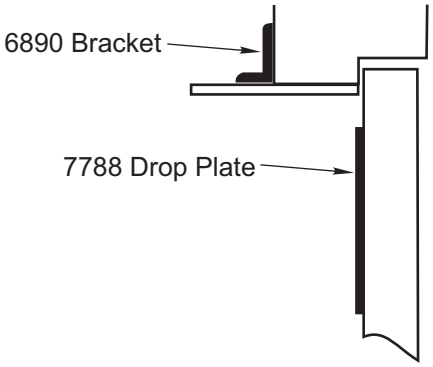


## Flush Partition

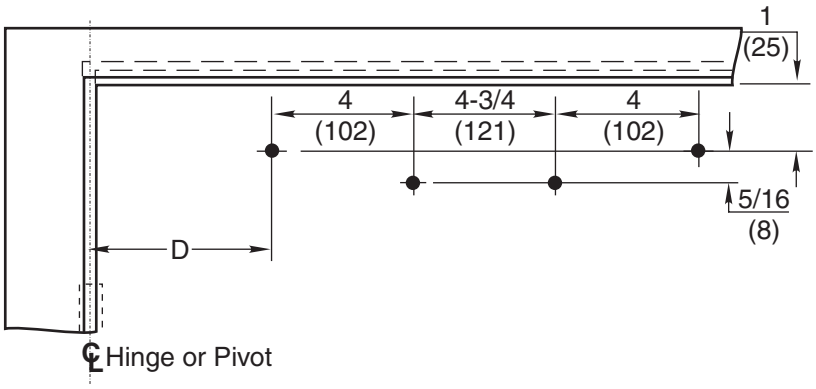


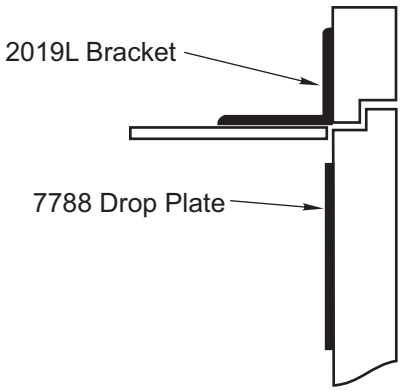


| Installation Dimensions Chart | | | | | | | |
|---|---|---|---|---|---|---|---|
| | Dim | Up to 90° | 90-95° | 95-100° | 100-105° | 105-110° | 110-115° |
| CLP7500R<br>CLP7500XR | D<br>inch/(mm) | 9-7/8 (251) | 9 (229) | 8-3/8 (213) | 7-5/8 (194) | 7-1/8 (181) | 6-1/2 (165) |

Copyright © 2013, 2014 Yale Security Inc., an ASSA ABLOY Group company. All rights reserved.
Reproduction in whole or in part without the express written permission of Yale Security Inc. is prohibited.

# Unit Adjustment

**Control Valve Adjustments**
(See Figure 3.)

**Closing Speed Controls (Figure 2A or 2B and 3.)**

- Valve “S” Controls Sweep Range.
- Valve “L” Controls Latch Range.

## Closing Power Control — Figure 1

**For 7500 Series Only**
Set closer to desired size. For recommended sizes, refer to the Power Adjustment Chart on page 3.

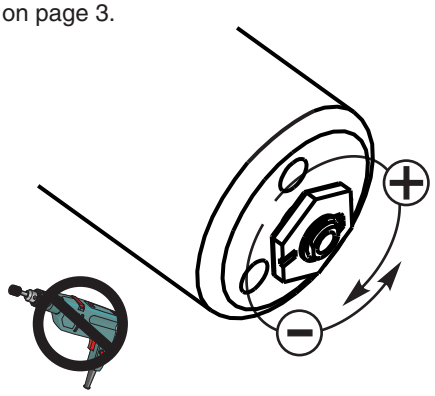

Install closer per instructions with the proper pre-load applied to the arm then adjust spring power. The power adjustment will not work properly if the closer spring is not pre-loaded. To increase power, use 11/16" wrench to turn power adjustment nut clockwise. To decrease power, turn nut counter clockwise.

**DO NOT use a power drill or driver to turn adjustment nut. This will damage closer and void warranty.**

## Closing Speed Controls — Figure 2

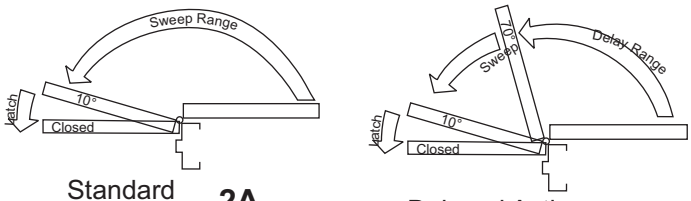


Standard Closing Cycle **2A**

Delayed Action Closing Cycle **2B**

Adjust Closing Speed Time to between 3 to 7 seconds from 90°. Use of the door by handicapped, elderly or small children may require greater closing time.

## Closing Speed Controls — Figure 3

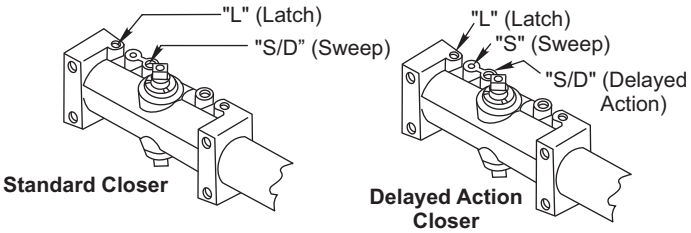


**Standard Closer**

**Delayed Action Closer**

Do not force valves counter-clockwise out of closer body or a fluid leak will occur.




**All Valves**

**Opening Cycle**
“Backcheck” valve controls the strength of cushioning in Backcheck Range. NEVER close this valve completely – it is not to provide a positive stop. (see Figure 4 and Figure 5).

## Opening Door Controls — Figure 4

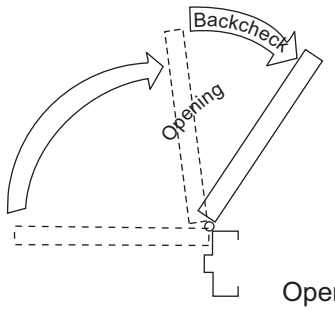


Opening Cycle

## Backcheck — Figure 5

Backcheck Position




Open for backcheck later in door-opening cycle.

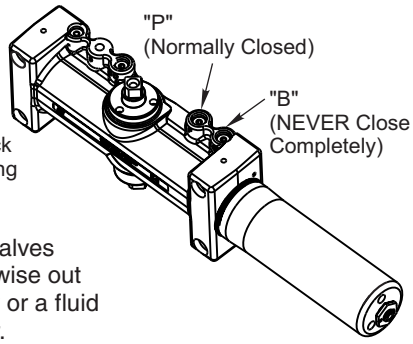


Backcheck Cushion

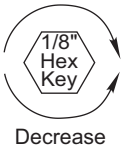


Do not force valves counter-clockwise out of closer body or a fluid leak will occur.

**Hold-Open Feature**

The hold-open mechanism is controlled by the hex nut feature located on the secondary arm underneath cap. Remove the cap by pulling straight down. Use a 7/16” wrench to adjust. Turning hex nut feature clockwise will increase the hold-open force. Turning hex nut feature counterclockwise will reduce the hold-open force. Hold-open mechanism can not be disengaged.

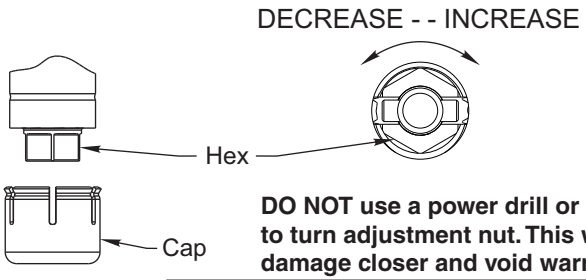


**DO NOT use a power drill or driver to turn adjustment nut. This will damage closer and void warranty.**


Norton
ASSA ABLOY
3000 Highway 74 East • Monroe, NC 28112
Tel: (877)-974-2255 • Fax: (800)-338-0965
www.nortondoorcontrols.com



Copyright © 2013, 2014 Yale Security Inc., an ASSA ABLOY Group company. All rights reserved.
Reproduction in whole or in part without the express written permission of Yale Security Inc. is prohibited.




ASSA ABLOY, the global leader in door opening solutions


80-9377-2208-020 (04-14)

Page Left Blank
Intinially

Copyright © 2013, 2014 Yale Security Inc., an ASSA ABLOY Group company. All rights reserved.
Reproduction in whole or in part without the express written permission of Yale Security Inc. is prohibited.