Norton®

ASSA ABLOY

Installation Instructions

Parallel Rigid Arm (PR) CloserPlus (CLP)

Model Numbers Included:

Series	Function	Sizing
Parallel Rigid Arm Units		
PR7500	NHO	1-6
PR7500H	HO	"
PR770**X**	NHO	2 THRU 6
PR770**X**H	HO	"
CloserPlus Arm Units		
CLP-7500	NHO	1-6
CLP-7500T	HO	"
CLP-770**X**	NHO	2 THRU 6
CLP-770**XT**	HO	"

"**X**" Designates closer size 2, 3, 4, 5, or 6

CAUTION An incorrectly installed or improperly adjusted door closer can cause property damage or personal injury. These instructions should be followed to avoid the possibility of misapplication or misadjustment. **CAUTION**

Additional Closer Options:
- "DA" indicates Delayed Action closing
- "H" indicates Hold-Open function. These components are handed
- "T" indicates Thumbturn actuated Hold-Open control, not handed

Optional Accessories:
- 7788 Drop Plate
- 2019L, 6890, 6891 Soffit Plate Accessories

NOTE: For special applications a separate door and frame preparation template is packed with these instructions. In those cases, use this instruction sheet for installation sequence and closer adjustments only.

Standard Frame Installation

Closer mounts on opposite to hinge (push) side of door. PR7500 Parallel Rigid Non Hold Open arm illustrated.

See Pages 3 and 4

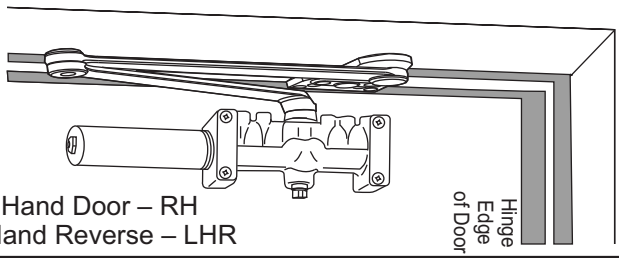

Right Hand Door – RH
Left Hand Reverse – LHR

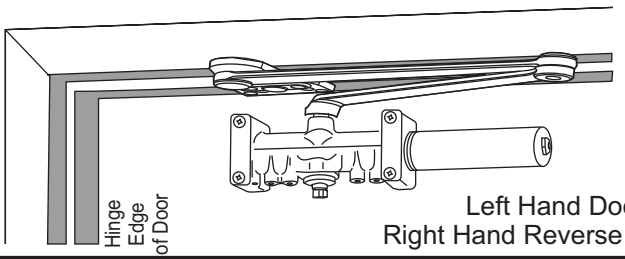

Left Hand Door – LH
Right Hand Reverse – RHR

Narrow Frame Installation

Closer mounts on opposite to hinge (push) side of door. CLP7500 CloserPlus arm illustrated.
6890 and 6891 accessories required for this application (supplied separately).

See Pages 3 and 4

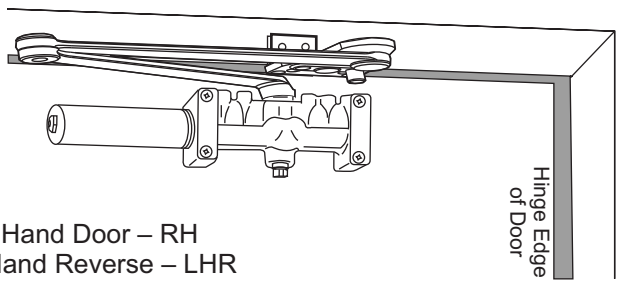

Right Hand Door – RH
Left Hand Reverse – LHR

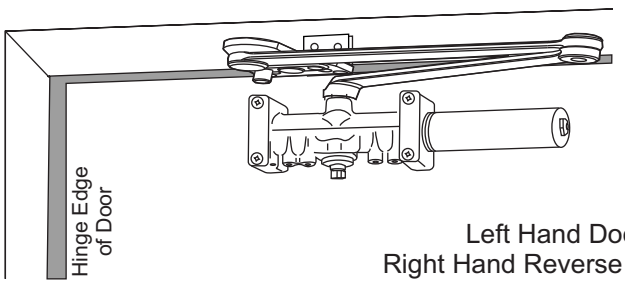

Left Hand Door – LH
Right Hand Reverse – RHR

Flush Partition Installation

Closer mounts on opposite to hinge (push) side of door. CLP7500T CloserPlus arm with Thumbturn Hold Open illustrated.
2019L accessory required for this application (supplied separately).

See Pages 3 and 4

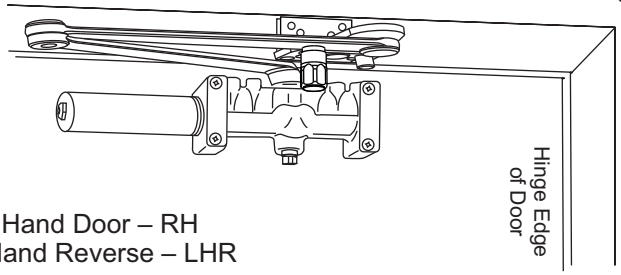

Right Hand Door – RH
Left Hand Reverse – LHR

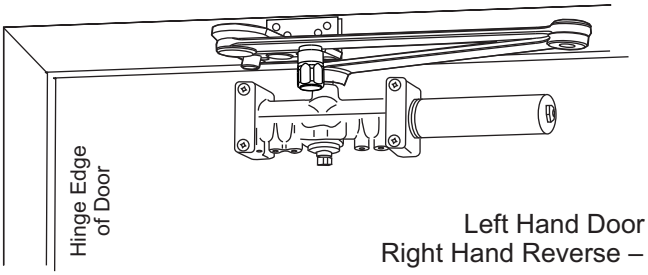

Left Hand Door – LH
Right Hand Reverse – RHR

Copyright © 2003, 2014 Yale Security Inc., an ASSA ABLOY Group company. All rights reserved.
Reproduction in whole or in part without the express written permission of Yale Security Inc. is prohibited.

Components

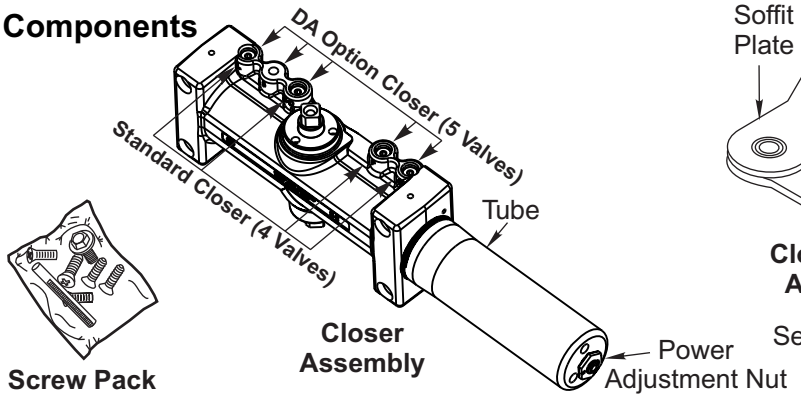

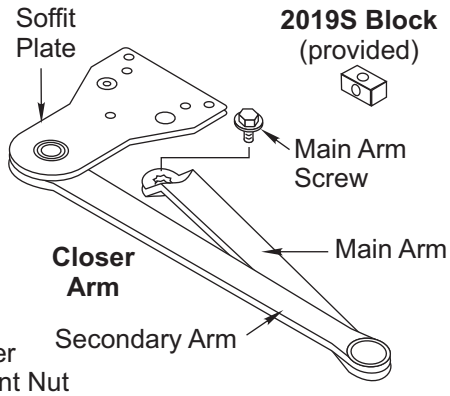

Optional Accessories

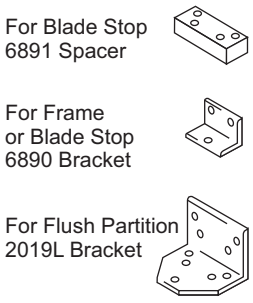

Arm Options

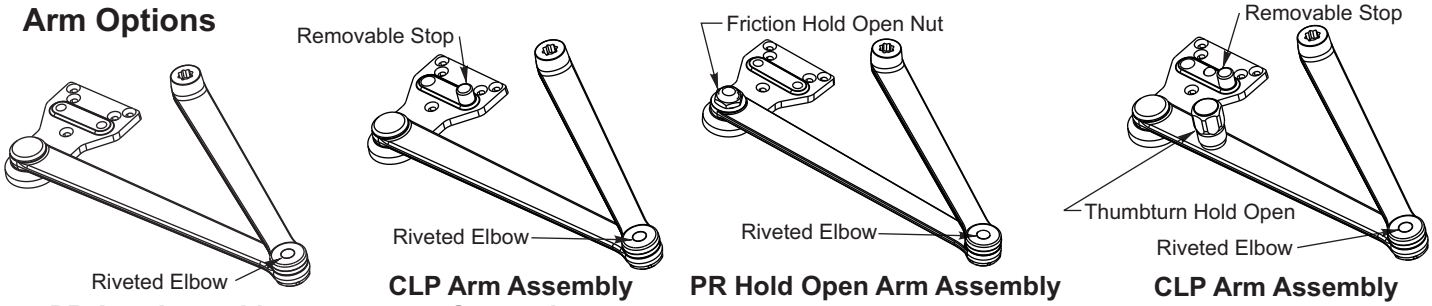

Cover Options

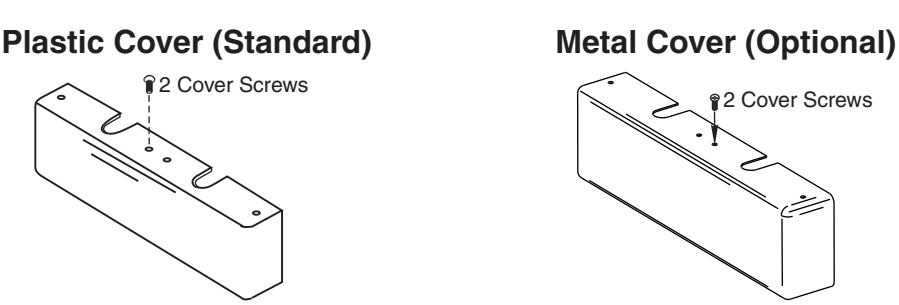

Preparation for Fasteners			
	Fasteners	**Door or Frame**	**Drill-Sizes**
Standard	Self-Drilling Screw	Aluminum or Metal	No drill required
		Wood	3/16" (4.80 mm) Pilot hole required
	1/4" - 20 machine screw	Metal	Drill: #7 (0.201" dia.)(5mm) Tap: 1/4" - 20
Optional	Sleeve nuts and bolts	Hollow Metal	9/32" (7 mm) thru; 3/8" (9.5 mm) door face opposite to closer
		Aluminum or Wood	3/8" (9.5 mm) through
	Through-bolts and grommet-nuts	All	9/32" (7 mm) thru; 3/8" (9.5 mm) dia. x 3/8" (9.5 mm) deep on door opposite to closer

Note: Wood doors **MUST** be pre-drilled when using Self-Drilling Screws.

Copyright © 2003, 2014 Yale Security Inc., an ASSA ABLOY Group company. All rights reserved.
Reproduction in whole or in part without the express written permission of Yale Security Inc. is prohibited.

Installation Instructions

- Select angle of opening and use dimensions shown on Page 4 and Dimension Chart below to locate 4 holes on door for closer body (or 4 holes for 7788 Drop Plate, Page 5, only if required) and 5 holes on stop/rabbet for Soffit Plate (or 4 holes on frame transom for 2019L bracket, only if required). For applications not covered in these instructions, a separate template will be required.
- Prepare door and frame for fasteners using "Preparation for Fasteners" chart on Page 2.
- Install closer body to door, or 7788 Drop Plate, with power adjustment shaft **away** from hinge edge of door and adjustment valves:
  Down for **Left Hand**
  Up for **Right Hand**

  Mount 7788 Drop Plate to door ... only if used (see Page 5).
- Install Main Arm: Close valves **('S/D'** or **'S')** and **'L'**, then using a wrench, rotate the pinion shaft at least 50° to permit alignment of the **Pinion Flat** with the proper arm mark:
  'Z' for **Left Hand**
  'Y' for **Right Hand**
  See below right for illustrations of this procedure.
- Reopen valves ('S/D' or 'S') and 'L', that were closed in previous step.
- With door closed, align soffit plate with holes in frame and fasten to frame with screws. Use 2019S and/or 6891 spacer blocks or 6890 reinforcing bracket as required.
- 7500 Series Closers only:
  Closer is shipped from factory set at mid-range. Using "Power Adjustment" chart below, rotate power adjustment shaft with 1/8" allen wrench supplied:
  Turn **CLOCKWISE** to **increase** power. Turn **COUNTER-CLOCKWISE** to **decrease** power
  See Page 6 for the illustration of this step.
- Make adjustments to closer before installing cover. See Page 6 for closer adjustment instructions.
  CAUTION: Do Not back valves out of closer body or a fluid leak will result.
- Install cover.

Power Adjustment Chart

DOOR	PARALLEL ARM INSTALLATION	*	MAXIMUM DOOR SIZE 32" (0.81 m)	36" (0.9 m)	42" (1.1 m)	48" (1.2 m)
INT	**PR7500/ CLP7500**		0	3	5	8
EXT			4	6	8	12
INT	**PR7500/ PR7700/ CLP7700**		0	2	5	8
EXT			2	5	8	11

*16.5 -360° TURNS MAXIMUM AVAILABLE

Installation Dimensions Chart

	Dim	Up to 90°	90°-95°	95°-100°	100°-105°	105°-110°	110°-115°	115°-130°	130°-150°	150°-180°
PR7500/ PR770X	A in.		8-3/4			7-1/4			6-1/4	5-1/4
	A (mm)		(222)			(184)			(159)	(133)
	B in.		9-1/4			7-3/4			6-3/4	5-3/4
	B (mm)		(235)			(197)			(171)	(146)
	C in.		9-3/8			7-7/8			6-7/8	5-7/8
	C (mm)		(238)			(200)			(175)	(149)
CLP7500/ CLP770X	A in.	10-1/8	9-1/4	8-5/8	7-7/8	7-3/8	6-3/4			
	A (mm)	(257)	(235)	(219)	(200)	(187)	(171)			
	B in.	10-5/8	9-3/4	9-1/8	8-3/8	7-7/8	7-1/4			
	B (mm)	(270)	(248)	(232)	(213)	(200)	(184)			
	C in.	10-3/4	9-7/8	9-1/4	8-1/2	8	7-3/8			
	C (mm)	(273)	(251)	(235)	(216)	(203)	(187)			

Arm Mounting Detail

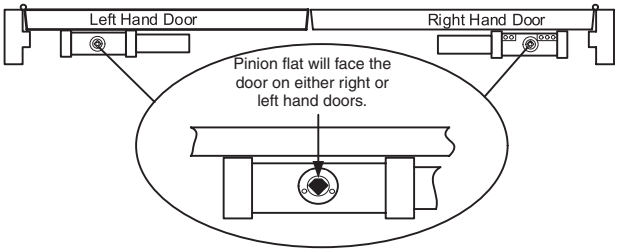

Arm to Pinion Assembly

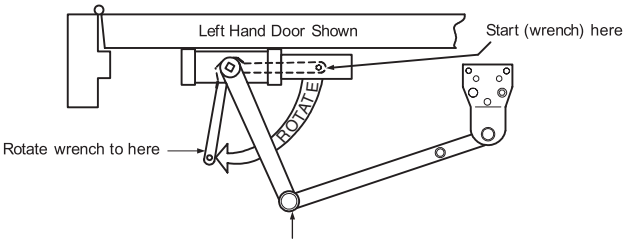

Install arm roughly here with flat side of pinion to the correct marking on the arm per the illustration below

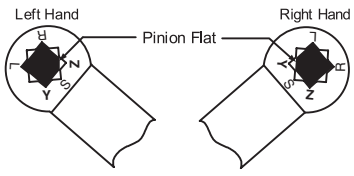

Final Installation

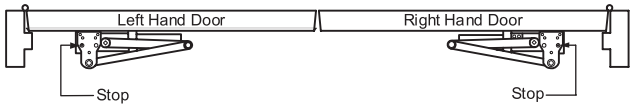

Copyright © 2003, 2014 Yale Security Inc., an ASSA ABLOY Group company. All rights reserved.
Reproduction in whole or in part without the express written permission of Yale Security Inc. is prohibited.

80-9377-2205-020 (05-14)

Standard Frame

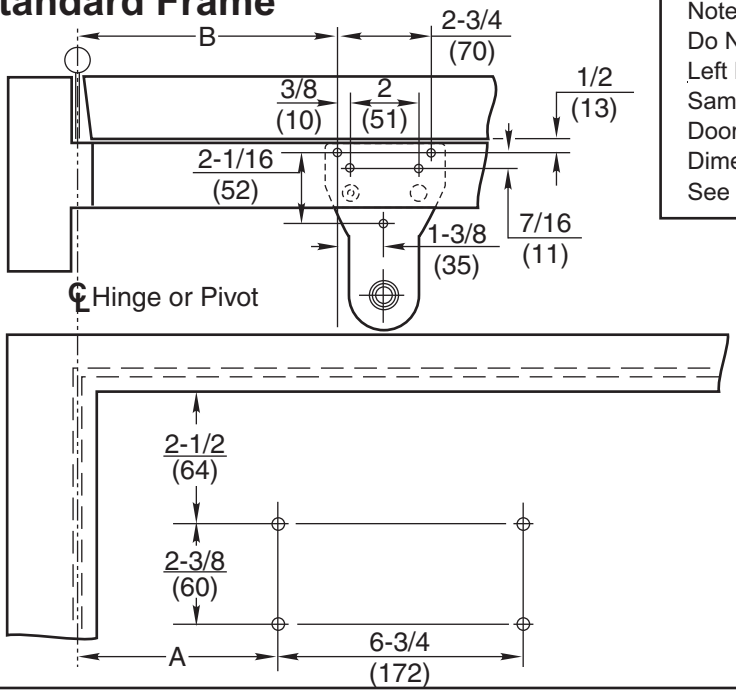

Notes:
Do Not Scale Drawing.
Left Hand Door Shown.
Same dimensions apply for Right Hand
Door measured from centerline of pivot point.
Dimensions are in inches (mm).
See Page 3 for A , B, & C dimension values.

Norton®
ASSA ABLOY

Standard Mount

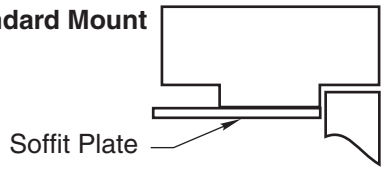

Blade Stop Mount

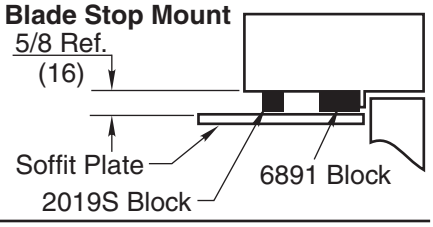

Narrow Frame

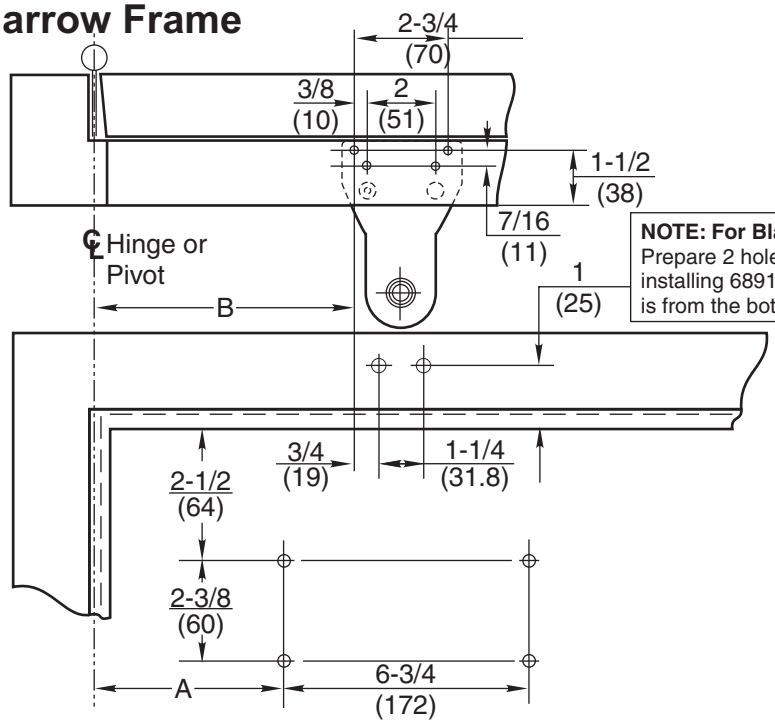

NOTE: For Blade Stop Mounting only.
Prepare 2 holes for 6890 bracket after installing 6891 block. The 1" dimension is from the bottom of the 6891 block.

Narrow Frame Mount

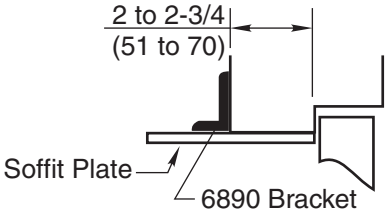

Blade Stop Mount

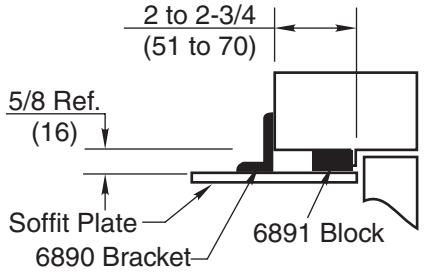

Flush Partition

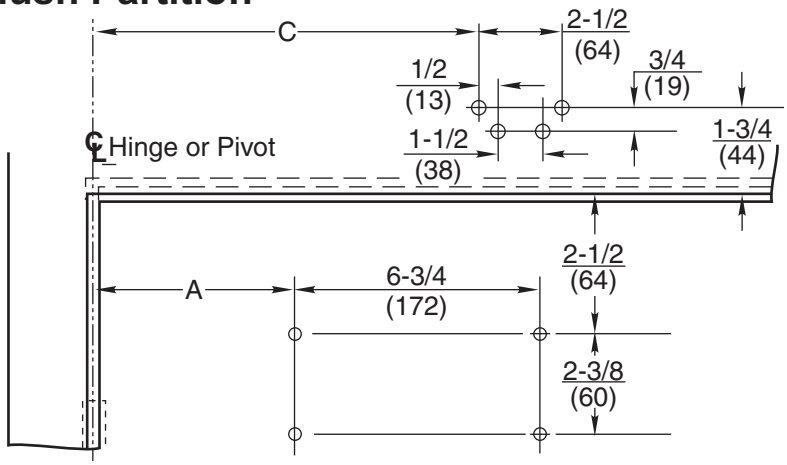

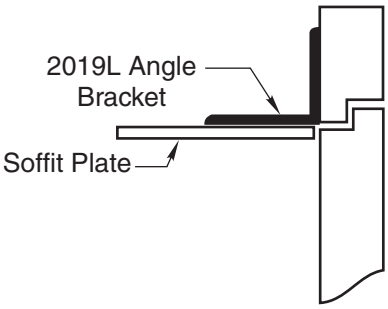

Copyright © 2003, 2014 Yale Security Inc., an ASSA ABLOY Group company. All rights reserved.
Reproduction in whole or in part without the express written permission of Yale Security Inc. is prohibited.

7788 Drop Plate Mounting Holes

Notes:
Left Hand Door Shown.
Same dimensions apply for Right Hand
Door measured from centerline of pivot point.
Dimensions are in inches (mm).
See Chart below for A dimension values.

Standard Frame

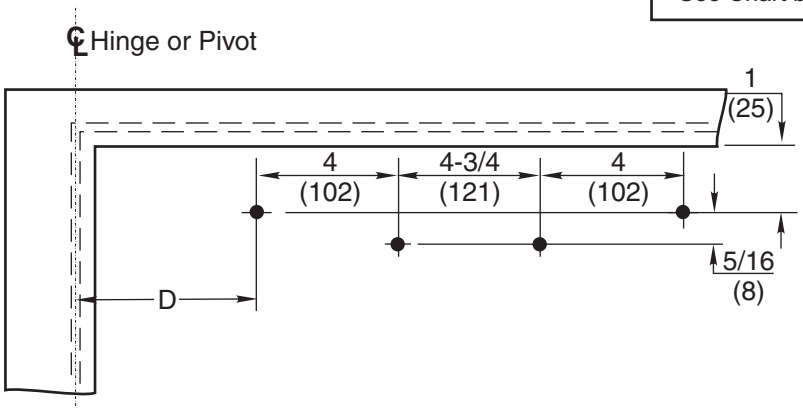

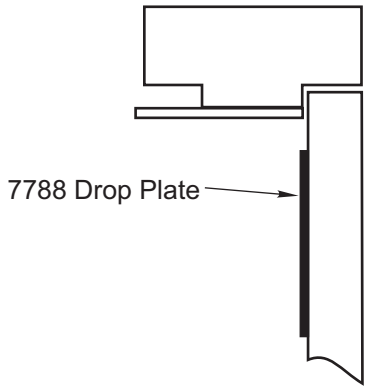

Narrow Frame

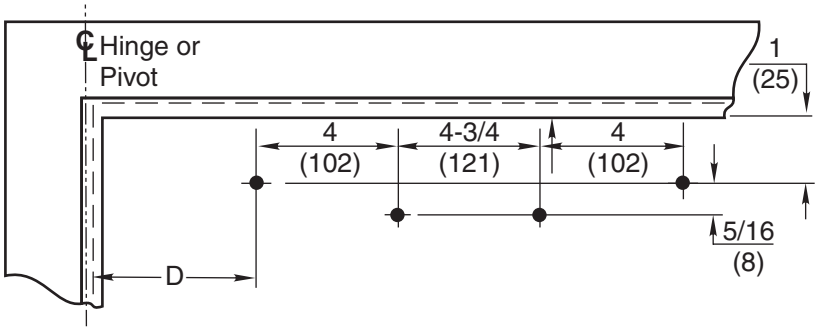

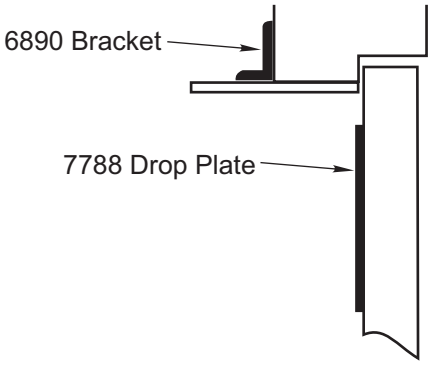

Flush Partition

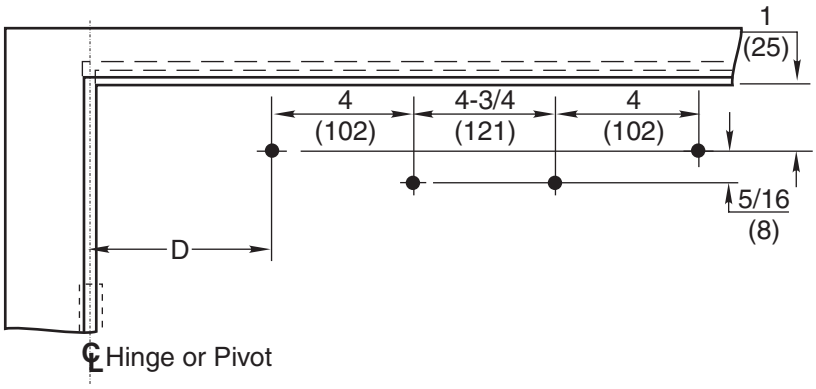

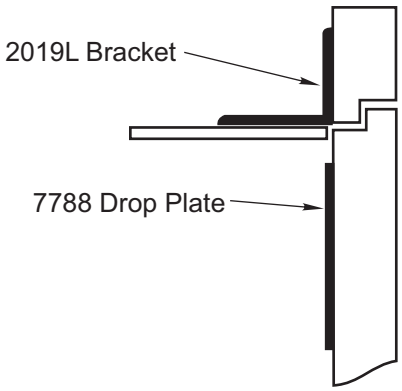

Installation Dimensions Chart										
	Dim	Up to 90°	90°-95°	95°-100°	100° to 105°	105°-110°	110°-115°	115°-130°	130°-150°	150°-180°
PR7500/ PR7500H/ PR770X/ PR770XH	D inch (mm)	8-1/2 (216)			7 (178)				6 (152)	5 (127)
CLP-7500/ CLP-7500T/ CLP-770X/ CLP-770XT		9-7/8 (251)	9 (229)	8-3/8 (213)	7-5/8 (194)	7-1/8 (181)	6-1/2 (165)			

Copyright © 2003, 2014 Yale Security Inc., an ASSA ABLOY Group company. All rights reserved.
Reproduction in whole or in part without the express written permission of Yale Security Inc. is prohibited.

80-9377-2205-020 (05-14)

Unit Adjustment

Control Valve Adjustments
(See Figure 3.)

Closing Speed Controls (Figure 2A or 2B and 3.)

- Valve “S” Controls Sweep Range.
- Valve “L” Controls Latch Range.

Closing Power Control — Figure 1

Power Adjustment Chart

Maximum Interior Door Size inches / (mm)	Maximum Exterior Door Size inches / (mm)	Turns from Zero
32 / (813)	28 / (711)	**5**
36 / (914)	34 / (864)	**8-1/2**
42 / (1067)	38 / (965)	**11**
52 / (1321)	42 / (1067)	**13-1/2**
60 / (1524)	48 / (1219)	**16-1/2**

NOTE: Maximum of 16-1/2 turns (360°) of Power Adjustment Nut.

Install closer per instructions with the proper pre-load applied to the arm then adjust spring power. The power adjustment will not work properly if the closer spring is not pre-loaded. To increase power, use 11/16" wrench to turn power adjustment nut clockwise. To decrease power, turn nut counter clockwise.

DO NOT use a power drill or driver to turn adjustment nut. This will damage closer and void warranty.



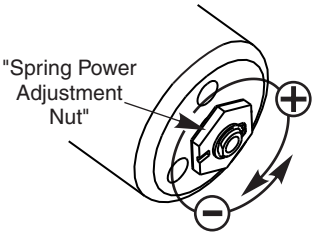

Closing Speed Controls — Figure 2

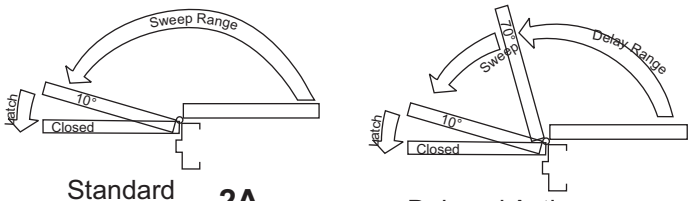

Adjust Closing Speed Time to between 3 to 7 seconds from 90°. Use of the door by handicapped, elderly or small children may require greater closing time.

Closing Speed Controls — Figure 3

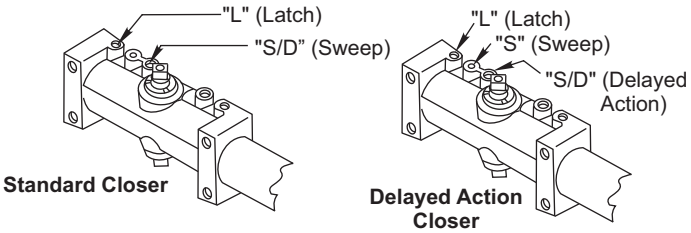

Do not force valves counter-clockwise out of closer body or a fluid leak will occur.



All Valves

Opening Cycle

“Backcheck” valve controls the strength of cushioning in Backcheck Range. NEVER close this valve completely – it is not to provide a positive stop. (see Figure 4 and Figure 5).

Opening Door Controls — Figure 4

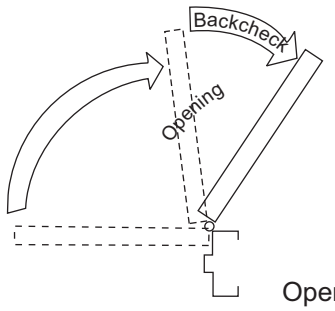

Backcheck — Figure 5

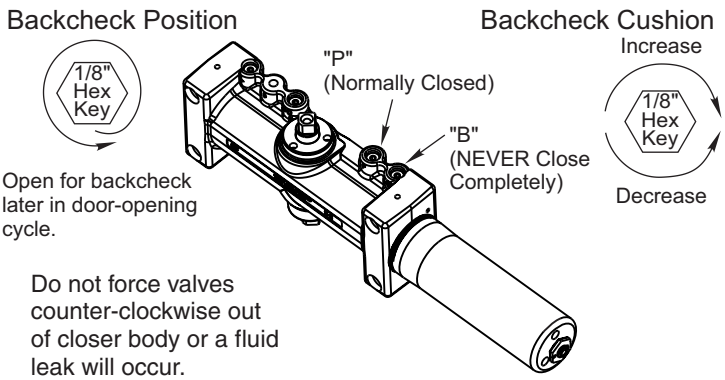

Friction Hold-Open Feature

Hold door open to opening angle desired and tighten holder-adjustment-nut (wrench supplied) or use 1” Box or Open End wrench.



Thumbturn Hold-Open Feature

The Thumbturn Hold-Open feature is controlled by the knob located on the arm of the unit. Turning this knob clockwise will engage the Hold-Open mechanism and increase the Hold-Open force. Turning this knob counterclockwise will reduce the Hold-Open force and disengage the Hold-Open mechanism.

DECREASE - - INCREASE

Thumbturn Action (Units suffixed “T”)



Norton
ASSA ABLOY
3000 Highway 74 East • Monroe, NC 28112
Tel: (877)-974-2255 • Fax: (800)-338-0965
www.nortondoorcontrols.com

Copyright © 2003, 2014 Yale Security Inc., an ASSA ABLOY Group company. All rights reserved.
Reproduction in whole or in part without the express written permission of Yale Security Inc. is prohibited.

ASSA ABLOY, the global leader in door opening solutions

80-9377-2205-020 (05-14)