Norton®

ASSA ABLOY

Installation Instructions

Unitrol®

Top Jamb Door Controls

UNI-J7500 (DA) (H) Series
UNI-J7700 (DA) (H) Series

- Always use template covering door opening angle desired, correct door thickness and frame reveal, and door hanging hardware being used. Template dimensions in these instructions (page 2) cover frame reveals to 7-3/8" (187mm) in openings with 1-3/4" (44mm) thick doors hung on 4-1/2" (114mm) wide template hinges (figure 3), 3/4" (19mm) offset pivots (figure 3) or center pivots (figure 4).
- Check hand of door: right or left (see figure 6, page 3). Make sure that door opens the full angle desired and latches without any binding action or interference. Note that hold open units will require that door swing five (5) degrees past hold open point to dead stop position.
- Always use sex nuts and bolts to mount arm foot and to mount closer plate in flush partitions.
- Top Jamb Unitrols are supplied with arm rod UNI-E according to frame reveal. An arm number is stamped on these arm rods as shown on figures 3 and 4 (page 2).

Components — Figure 1

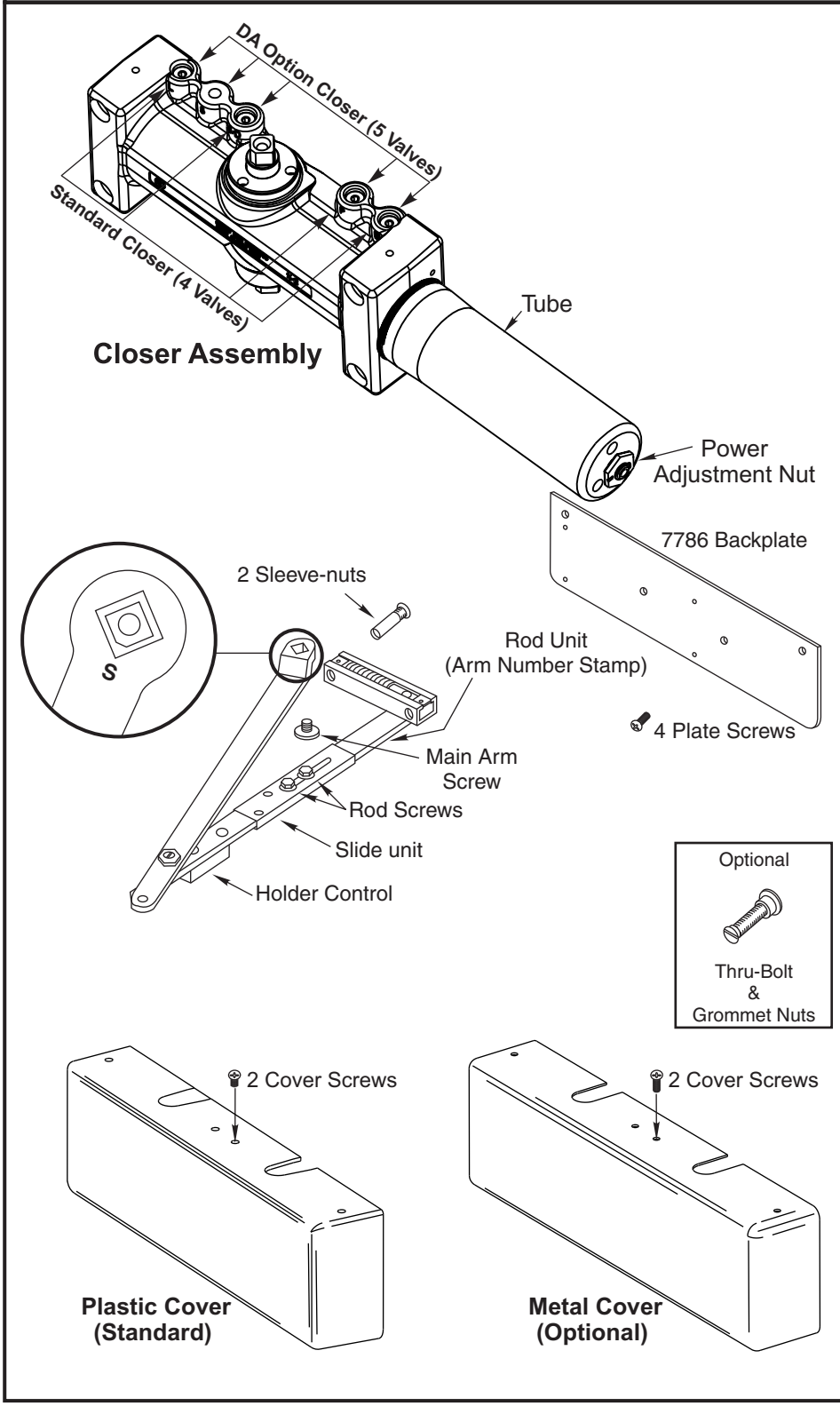

Copyright © 2008, 2014 Yale Security Inc., an ASSA ABLOY Group company. All rights reserved.
Reproduction in whole or in part without the express written permission of Yale Security Inc. is prohibited.

Top Jamb Installation Template
Figure 2

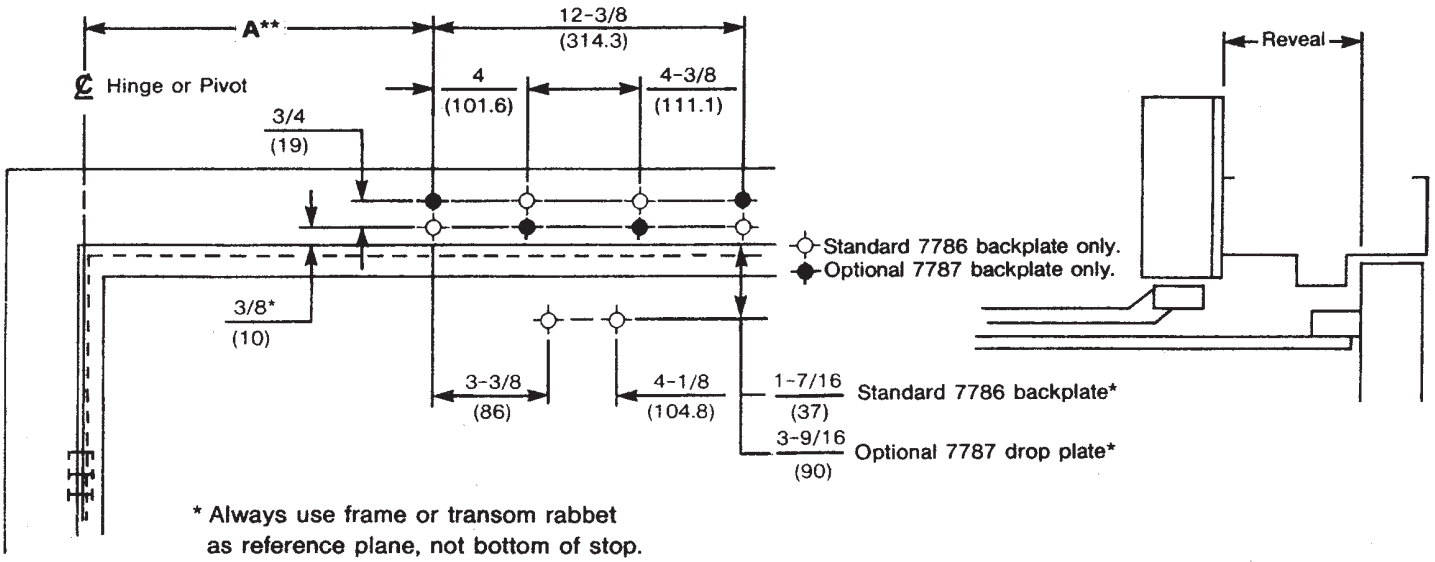

* Always use frame or transom rabbet as reference plane, not bottom of stop.

** For 1¾" door with 4½" wide butts or ¾" offset-pivots see figure 4.
For 1¾" door with center-pivots see figure 4.
All other conditions require special template.

Do Not Scale Drawing
Left Hand Door Shown
Dimensions are in inches (mm)

Door-Control location for 1¾" (44mm.) thick doors hung on 4½" (114mm.) wide template-hinges or ¾" (19mm.) offset-pivots. Figure 3

Arm Number Stamp	NON-HOLDER	J6600-4		J6200-4		J6100-4		J6400-4		J6500-41		J6500-42		J6500-43	
	HOLD-OPEN	J6600-7		J6200-7		J6100-7		J6400-7		J6500-71		J6500-72		J6500-73	
Reveal	inches	0-3/8		1/2-2		2-1/8–3-1/4		3-3/8–4-1/4		4-3/8–5-3/8		5-1/2–6-3/8		6-1/2–7-3/8	
	mm.	0-10		13-50		55-83		85-108		111-137		140-162		165-187	
Door Opening Angle		Dimension A		Dimension A		Dimension A		Dimension A		Dimension A		Dimension A		Dimension A	
Hold Open	Door Stop	inches	mm.	inches	mm.	inches	mm.	inches	mm.	inches	mm.	inches	mm.	inches	mm.
85°	90°	9-3/4	248	9-7/8	251	9-3/4	248	10	254	10-1/8	257	10-1/8	257	10-1/8	257
90°	95°	9	229	9-1/4	235	9-1/8	232	9-1/2	241	9-3/8	238	9-3/8	238	9-3/8	238
95°	100°	8-3/8	213	8-3/4	222	8-1/2	216	8-7/8	225	8-7/8	225	8-7/8	225	8-7/8	225
100°	105°	7-7/8	200	8-1/4	210	8	203	8-1/4	210	8-3/8	213	8-3/8	213	8-3/8	213
105°	110°	7-1/2	191	7-3/4	197	7-3/4	197	8	203	8-1/8	206	8-1/8	206	8-1/8	206
110°	115°	7-1/8	181	7-3/8	187	7-3/8	187	7-3/8	187	7-5/8	194	7-5/8	194	7-5/8	194

Door-Control location for 1¾" (44mm.) thick doors hung on center pivots. Figure 4

Arm Number Stamp	NON-HOLDER	J6600-4		J6200-4		J6100-4		J6400-4		J6500-41		J6500-42		J6500-43	
	HOLD-OPEN	J6600-7		J6200-7		J6100-7		J6400-7		J6500-71		J6500-72		J6500-73	
Reveal	inches	0-3/8		1/2-2		2-1/8–3-1/4		3-3/8–4-1/4		4-3/8–5-3/8		5-1/2–6-3/8		6-1/2–7-3/8	
	mm.	0-10		13-50		55-83		85-108		111-137		140-162		165-187	
Door Opening Angle		Dimension A		Dimension A		Dimension A		Dimension A		Dimension A		Dimension A		Dimension A	
Hold Open	Door Stop	inches	mm.	inches	mm.	inches	mm.	inches	mm.	inches	mm.	inches	mm.	inches	mm.
85°	90°	10-1/8	257	10-1/4	260	10-1/4	260	10-1/2	267	10-5/8	270	10-5/8	270	10-5/8	270
90°	95°	9-5/8	244	9-5/8	244	9-5/8	244	10	254	10	254	10	254	10	254
95°	100°	9	229	9-1/4	235	9-1/8	232	9-3/8	238	9-5/8	244	9-5/8	244	9-5/8	244
100°	105°	8-1/2	216	8-5/8	219	8-5/8	219	8-7/8	225	9-1/8	232	9-1/8	232	9-1/8	232
105°	110°	8	203	8-1/4	210	8-1/8	206	8-1/2	216	8-3/4	222	8-3/4	222	8-3/4	222
110°	115°	7-5/8	194	7-3/4	197	7-7/8	200	8-1/8	206	8-1/2	216	8-1/2	216	8-1/2	216

Copyright © 2008, 2014 Yale Security Inc., an ASSA ABLOY Group company. All rights reserved.
Reproduction in whole or in part without the express written permission of Yale Security Inc. is prohibited.

ASSA ABLOY, the global leader in door opening solutions
80-9377-1401-020 (04-14)

Preparation for Fasteners

Figure 5

Fasteners	Application	Door or Frame	Drill Sizes
Sex-nuts and bolts	Arm-foot, (closer plate in flush partition)	Hollow-Metal	9/32" (7.00mm.) through 3/8" (9.50mm.) door-face opposite to closer
		Aluminum or Wood	3/8" (9.50mm.) through
#14 ×1-1/4" (32mm.) type "A" S.M. screws	Closer plate	Wood	3/16" (4.30mm.)
¼-20 machine screw		Metal	drill: #7 (.201") tap: ¼-20
Through-bolts and grommet-nuts	Optional	All	9/32" (7.00mm.) through 3/8" (9.50mm.) dia. × 3/8" (10mm.) deep, door-face opposite to closer

Top-Jamb Installation

Figure 6

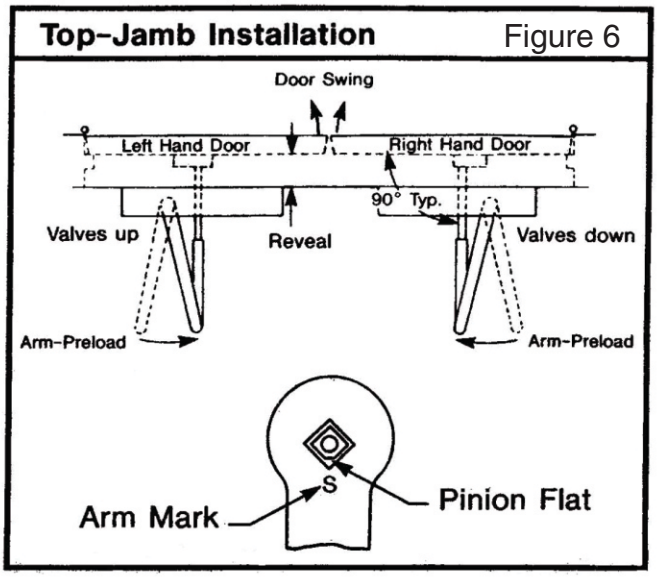

Installation Sequence	Remarks
See figure 2 and select template dimensions Note: Separate template required for other applications	1¾" (44mm.) thick door on 4½" (114mm.) wide hinges or ¾" (19mm.) offset-pivots: figure 3. 1¾" (44mm.) thick door on center-pivots: figure 4. Frame reveals and door opening angles as charted: shock absorber will permit five (5) degrees of door travel beyond hold-open position.
Locate holes on frame trim face, stop-side.	Four (4) for 7786 backplate.
Locate holes on door	Two (2) for arm-foot.
Prepare door and frame for fasteners.	See chart "Preparation for Fasteners" (figure 5). Note: Use sex-bolts in frames of flush partitions.
Mount closer plate and install closer with power-adjustment-nut toward lock-stile.	Right hand—valves down Left hand—valves up
Disassemble rod-unit from arm-assembly and install on door.	Rod under shock-absorber and closest possible to lock-stile (see figures 2 and 6)
Mount main arm onto closer pinion shaft, aligning proper arm mark with pinion flat. Secure with main arm screw.	Arm Mark "S" See figure 6.
Insert connecting-rod into slide-unit and preload arm. Secure with rod-screws.	Adjust rod to perpendicular with door. See figure 6.
Adjust closer and install cover.	See "Unit Adjustment" on back page.

Copyright © 2008, 2014 Yale Security Inc., an ASSA ABLOY Group company. All rights reserved.
Reproduction in whole or in part without the express written permission of Yale Security Inc. is prohibited.

Unit Adjustment

Closing Speed Controls (Figure 8.)

- Valve "S" Controls Sweep Range.
- Valve "L" Controls Latch Range.
- Valve "D" Controls Optional Delay Range.

Closing Power Control — Figure 7

For UNI-J7500 Series Only

Set closer to desired size. For recommended sizes, refer to the Power Adjustment Chart below.

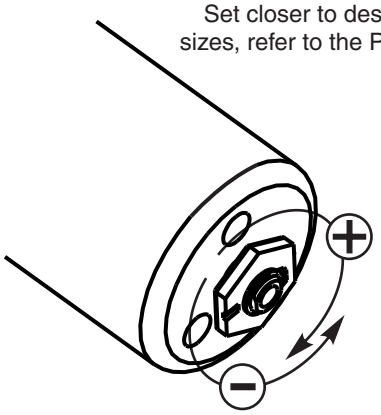

Install closer per instructions with the proper pre-load applied to the arm then adjust spring power. The power adjustment will not work properly if the closer spring is not pre-loaded. To increase power, use 11/16" wrench to turn power adjustment nut clockwise. To decrease power, turn nut counter clockwise.



DO NOT use a power drill or driver to turn adjustment nut. This will damage closer and void warranty.

Closing Speed Controls — Figure 8

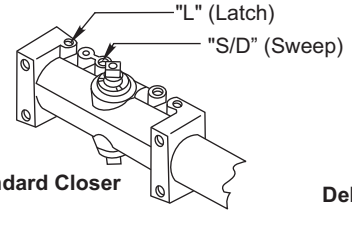

Do not force valves counter-clockwise out of closer body or a fluid leak will occur.



All Valves

Opening Speed Controls (Figure 10.)

- Backcheck ("B") valve controls the hydraulic resistance to door opening. NEVER close this valve completely – it is not to provide a positive stop.
- Backcheck position ("P") valve controls the door angle where backcheck cushioning starts. Valve normally closed.

Opening Door Controls — Figure 10

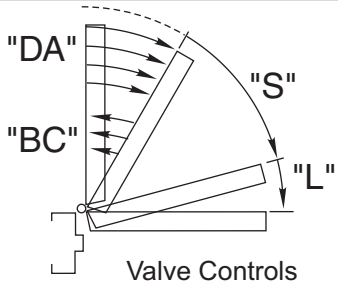

All valves adjustable with 1/8" hex key furnished in screw pack.

Backcheck — Figure 11

Backcheck Position



Open for backcheck later in door-opening cycle.

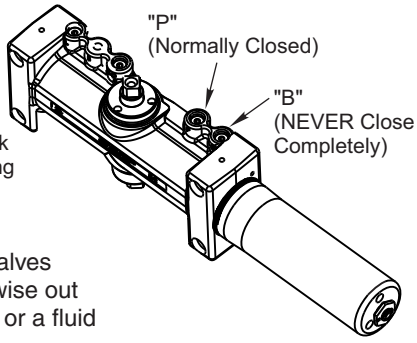

Backcheck Cushion

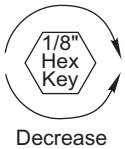

Do not force valves counter-clockwise out of closer body or a fluid leak will occur.

Hold Open controls are at arm elbow (models suffixed "H"). To select hold open on or hold open off and to adjust the hold open force, use screwdriver as illustrated below.

Hold-Open Controls

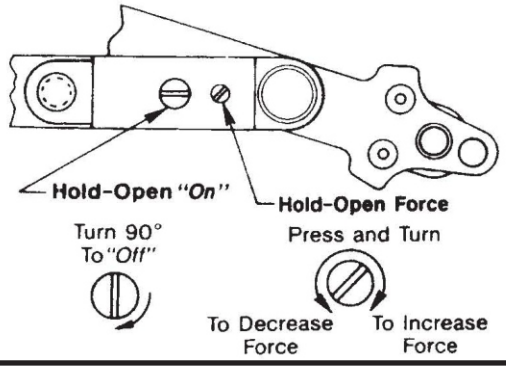

Power Adjustment Chart — Figure 9

Door Size inches (mm)	UNI-J7500 Turns from Zero	
	Interior Door	Exterior Door
28-32 (711-813)	**0**	**3**
33-36 (838-914)	**2**	**5**
37-42 (940-1067)	**5**	**7**
43-48 (1092-1219)	**8**	**11**

Norton
ASSA ABLOY
3000 Highway 74 East • Monroe, NC 28112
Tel: (877)-974-2255 • Fax: (800)-338-0965
www.nortondoorcontrols.com

Copyright © 2008, 2014 Yale Security Inc., an ASSA ABLOY Group company. All rights reserved.
Reproduction in whole or in part without the express written permission of Yale Security Inc. is prohibited.

ASSA ABLOY, the global leader in door opening solutions

80-9377-1401-020 (04-14)