Norton®

ASSA ABLOY

Installation Instructions

Unitrol®

Parallel Arm Door Controls

UNI-7500 (DA) (H) Series
UNI-7700 (DA) (H) Series

Use these instructions for installing all models of these series on 1-3/4" (45mm) doors hung on 4-1/2" (114mm) wide hinges or 3/4" (19mm) offset pivots.

DOOR WIDTH determines the location of the closer. Use ONLY the template chart corresponding to your door width.

Use ONLY the dimensions given in each template chart for the door total OPENING angle or the HOLD-OPEN angle desired.

Unitrol® parallel arms are supplied in one of three lengths, according to door width specified on order. To verify that the ARM you have is CORRECT FOR THE DOOR WIDTH, check the number stamped on the arm against the chart below.

DOOR WIDTH	Non-Holder Arm	Hold-Open Arm
28"-32" 0.70-0.80M	6100-11	6100-1
33"-41" 0.85-1.00M	6100-13	6100-3
42"-48" 1.05-1.20M	6100-14	6100-4

Components

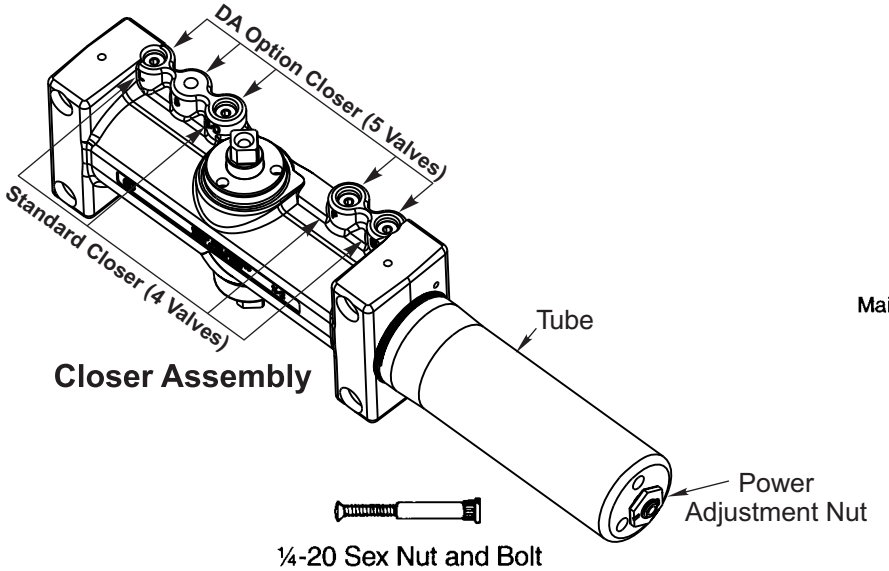

Closer Assembly

¼-20 Sex Nut and Bolt
-4 each, to mount closer or drop plate to door-

6190 Bracket

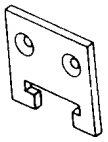

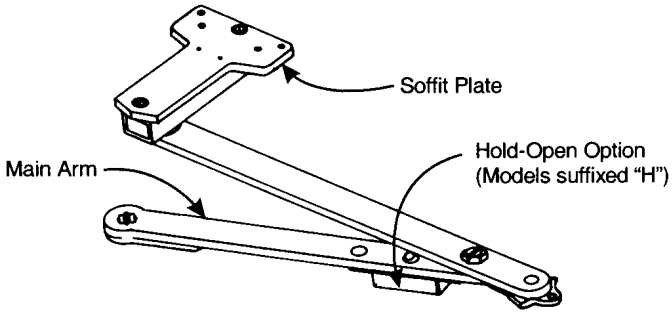

Unitrol® Parallel Arm Assembly



¼-20 Machine Screw



#14 Type "A" Screw

-6 each, to mount soffit plate and 6190 bracket-

Deep Reveal Option	Flush Partition Option
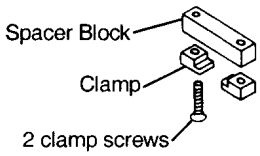	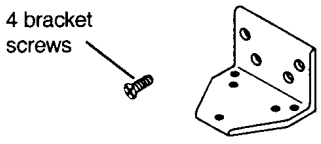
Number 6191 Reinforcing Kit	Number 2019L Bracket



Cover Screw
(2 Per Cover)

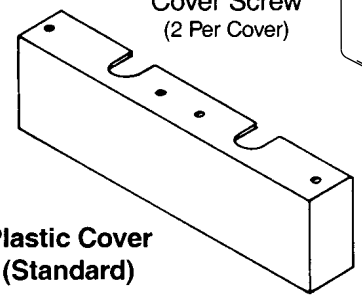

Plastic Cover (Standard)

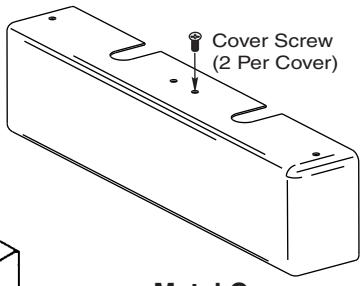

Metal Cover (Optional)

Copyright © 2007, 2014 Yale Security Inc., an ASSA ABLOY Group company. All rights reserved.
Reproduction in whole or in part without the express written permission of Yale Security Inc. is prohibited.

ASSA ABLOY, the global leader in door opening solutions

80-9377-1351-020 (04-14)

Frame Template for 1-7/8 to 4-5/8 Reveals
Door Template Typical for All Installations

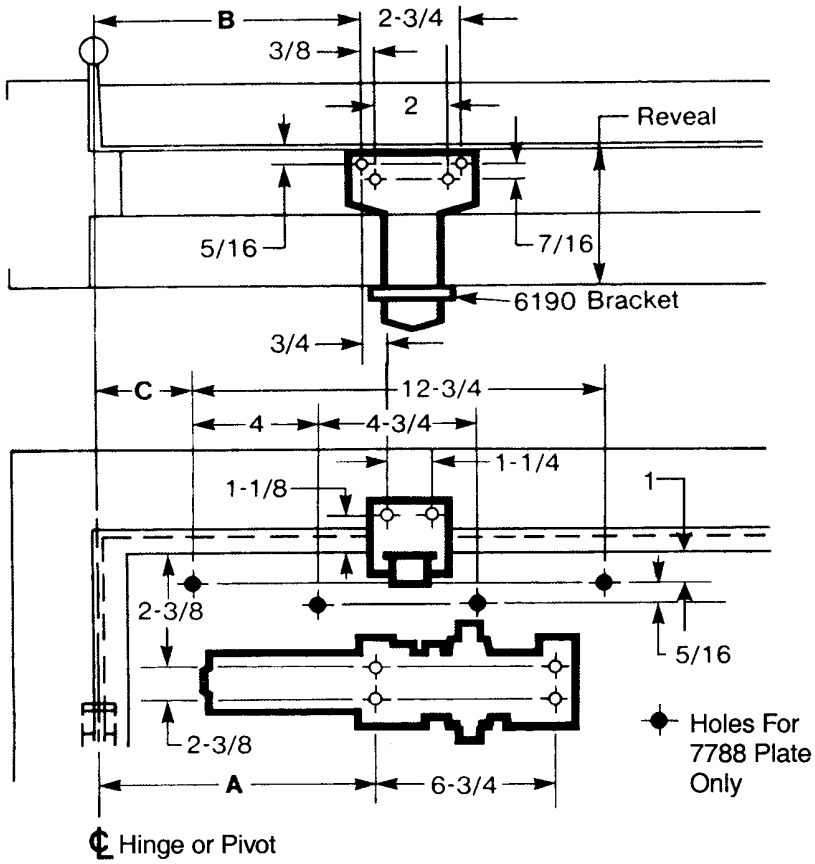

DIMENSIONS FOR DOORS 28" TO 32" WIDE				
Opening		Dimension A	Dimension B	Dimension C
Hold-Open	Stop			
85°	90°	10-1/4	10-1/2	4-1/2
90°	95°	9-5/8	9-7/8	3-7/8
95°	100°	9-1/8	9-3/8	3-3/8
100°	105°	8-3/4	9	3
105°	110°	8-3/8	8-5/8	2-5/8
110°	115°	8	8-1/4	2-1/4

DIMENSIONS FOR DOORS 33" TO 41" WIDE				
Opening		Dimension A	Dimension B	Dimension C
Hold-Open	Stop			
85°	90°	12-3/4	12-7/8	7
90°	95°	12	12-1/8	6-1/4
95°	100°	11-1/2	11-5/8	5-3/4
100°	105°	10-7/8	11	5-1/8
105°	110°	10-1/2	10-5/8	4-3/4
110°	115°	10	10-1/8	4-1/4

DIMENSIONS FOR DOORS 42" TO 48" WIDE				
Opening		Dimension A	Dimension B	Dimension C
Hold-Open	Stop			
85°	90°	14-7/8	15-1/8	9-1/8
90°	95°	14	14-1/4	8-1/4
95°	100°	13-3/8	13-5/8	7-5/8
100°	105°	12-3/4	13	7
105°	110°	12-1/4	12-1/2	6-1/2
110°	115°	11-7/8	12-1/8	6-1/8

Template Information

- Door template is typical for all installations.
- Frame template must be selected according to reveal.
  - 1-7/8 to 4-5/8 Frame Reveals (Uses 6190 Bracket).

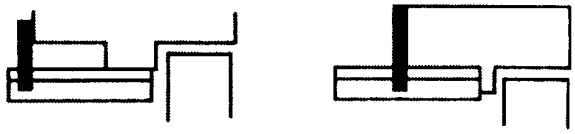

Frame Template: Page 2

  - Frame Reveals Over 4-5/8 (Uses 6190 Clamp Kit).

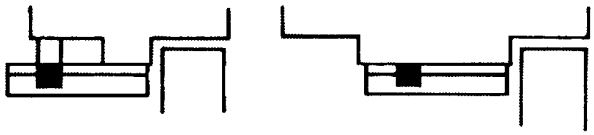

Frame Template: Page 3

  - Flush Partitions (Uses 2019L Bracket).

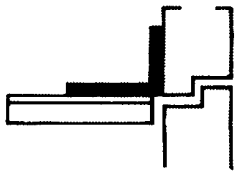

Frame Template: Page 3

- Dimension charts on this page are typical for all templates.
- Do not scale drawing.
- Left hand door shown.
- Dimensions are in inches.
- Metric conversion chart below.
- Fastener specifications on Page 3.

inches	mm	inches	mm	inches	mm	inches	mm
5/16	8.0	2-3/4	69.9	8-3/8	213	11-7/8	302
3/8	9.5	3	76	8-5/8	219	12	305
7/16	11.1	3-3/8	86	8-3/4	222	12-1/8	308
½	12.7	3-7/8	98.5	9	229	12-1/4	311
¾	19.1	4	101.6	9-1/8	232	12-1/2	318
1	25	4-1/4	108	9-3/8	238	12-3/4	323.9
1-1/8	29	4-3/8	111	9-5/8	244	12-7/8	327
1-1/4	31.8	4-1/2	114	9-7/8	251	13	330
1-1/2	38.1	4-3/4	120.7	10	254	13-3/8	340
1-3/4	44	5-1/8	130	10-1/8	257	13-5/8	346
1-7/8	48	5-3/4	146	10-1/4	260	14	356
2	50.8	6-1/4	159	10-1/2	267	14-1/4	362
2-1/8	54	6-3/4	171.5	10-5/8	270	14-7/8	378
2-1/4	57	7	177.8	10-7/8	276	15-1/8	384
2-3/8	60.5	8	203	11-1/2	292		
2-5/8	67	8-1/4	210	11-5/8	295		

Copyright © 2007, 2014 Yale Security Inc., an ASSA ABLOY Group company. All rights reserved.
Reproduction in whole or in part without the express written permission of Yale Security Inc. is prohibited.

Frame Template for Reveals Over 4-5/8
Door Template on Page 2

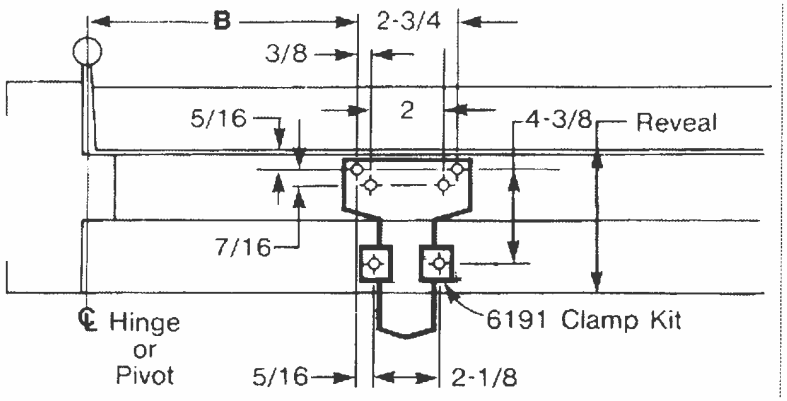

Frame Template for Flush Partitions
Door Template on Page 2

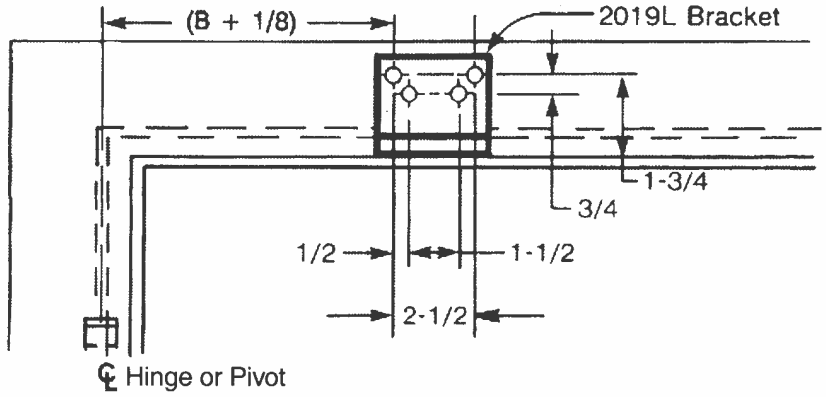

Norton
ASSA ABLOY

Installation Sequence

- **Read Front Page.**
Installation ground rules and components identification are on this page.

- **Match hardware to opening.**
Follow "Template Information" on Page 2.

- **Mark mounting holes location.**
Use dimensions for hold-open or door stop angle desired. Mark position of 4 holes on door for closer (or drop plate) and 6 holes on frame for soffit plate (or 4 for 2019L angle bracket).

- **Prepare holes for fasteners.**
See chart below.

- **Mount closer to door.**
Drop plate first, if used. Place spring tube end toward the hinge edge of the door; closer with valves up for right hand door, with valves down for left hand door.

- **Mount arm to frame.**
Fasten soffit plate (or angle bracket if flush partition) to frame. Mount 6190 bracket or 6191 clamps to hold soffit plate flat.

- **Install arm on pinion top.**
Close valve "S". Rotate pinion over 45° to align main arm letter "R" (right hand) or "L" (left hand) with pinion flat. Fasten with arm screw. See "Typical Installation" figure below.

- **Adjust closer.**
See "Unit Adjustment" on page 4.

- **Install cover.**
See front page.

Fastener	Frame	Door	Drill
1/4-20 machine screw	metal	none	#7 (.201 dia.) or *5.10mm.* drill...1/4-20 tap
#14 type "A" sheet metal screw	wood	none	3/16" *(4.30mm.)*
SNB	none	hollow-metal	9/32" *(7.00mm.)* thru... 3/8" *(9.50mm.)* door face opposite to closer
		aluminum or wood	3/8" *(9.50mm.)* thru

Typical Installation

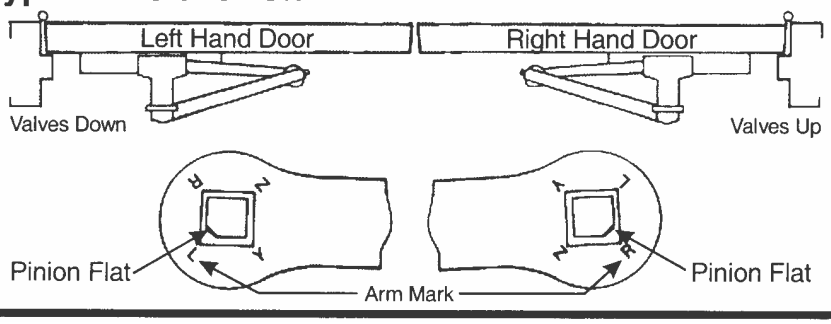

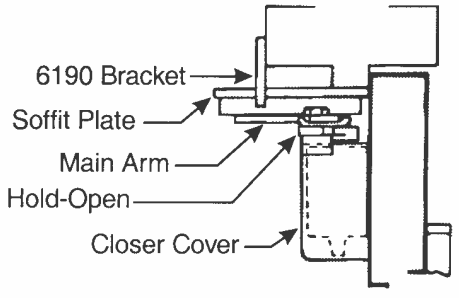

Copyright © 2007, 2014 Yale Security Inc., an ASSA ABLOY Group company. All rights reserved.
Reproduction in whole or in part without the express written permission of Yale Security Inc. is prohibited.

Unit Adjustment

- **Power Adjustment**
  Spring Power is controlled by the power adjustment nut at the end of the closer. An 11/16" wrench is required. All closers are supplied at lowest power point. Clockwise turns of the power adjustment nut may increase closer power up to 50% over the nominal power value. Basic power of multi size closers is first set as shown on the "Power Setting' chart.

- **All Valves** adjustable by 1/8" (3.18mm) hex key (supplied).

- **Backcheck** cushioning controlled by valve marked "BC". (Never close BC valve completely.) Valve "P" (normally fully closed), is open to move backcheck start to a greater door opening angle.

- **Delayed Action** option permits door to creep from fully open to about 70°. Creeping time controlled by valve marked "D".

- **Hold-Open** option is found at the arm elbow. To select hold-open "on" or hold-open "off" and to adjust the hold-open force...use screwdriver as illustrated.

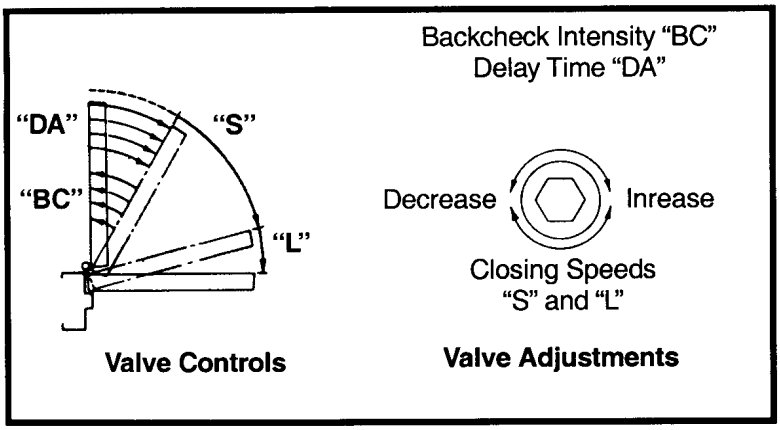

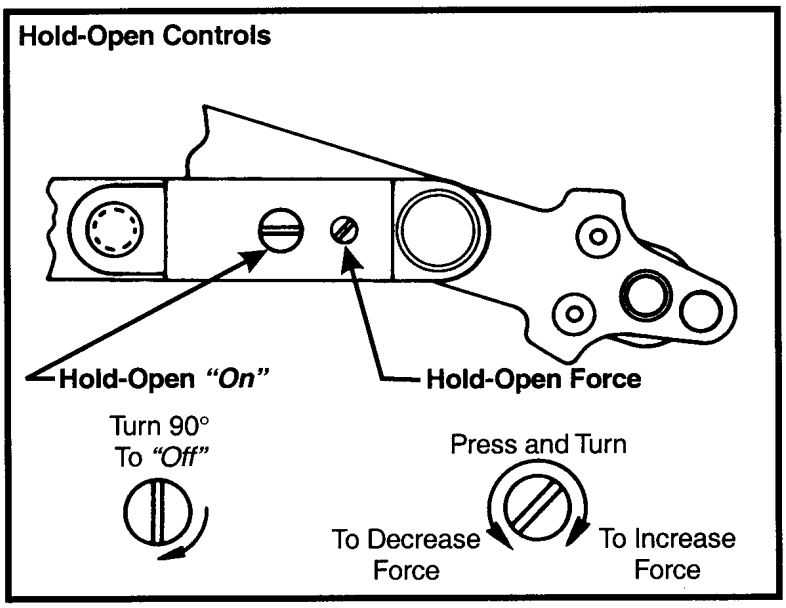

Closing Power Control

For 7500 Series Only

Set closer to desired size. For recommended sizes, refer to the Power Adjustment Chart below.

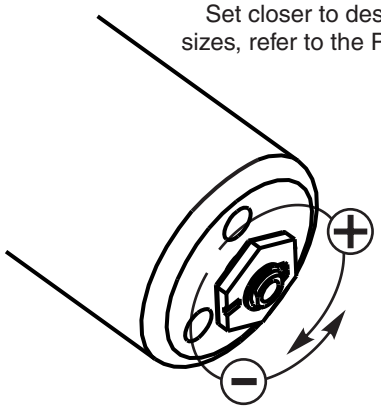

Install closer per instructions with the proper pre-load applied to the arm then adjust spring power. The power adjustment will not work properly if the closer spring is not pre-loaded. To increase power, use 11/16" wrench to turn power adjustment nut clockwise. To decrease power, turn nut counter clockwise.



DO NOT use a power drill or driver to turn adjustment nut. This will damage closer and void warranty.

Power Setting - Multi size Closers

Door Size Inches (M)	Turns from Zero Series UNI-7500	
	Interior Door	Exterior Door
28-32 (0.70-0.80)	1	3
33-41 (0.85-1.00)	6	8
42-48 (1.05-1.20)	9	12

Norton
ASSA ABLOY
3000 Highway 74 East • Monroe, NC 28112
Tel: (877)-974-2255 • Fax: (800)-338-0965
www.nortondoorcontrols.com

Copyright © 2007, 2014 Yale Security Inc., an ASSA ABLOY Group company. All rights reserved.
Reproduction in whole or in part without the express written permission of Yale Security Inc. is prohibited.

ASSA ABLOY, the global leader in door opening solutions

80-9377-1351-020 (04-14)